Test Report

No.: CZHL260400514901PG **Date:** APR. 22, 2026

Wenzhou Dream Garden Amusement Equipment Co., LTD
Room 06-4, 10th Floor, Building A3, Wenzhou Wanyang Science and Technology City, No.2999 Nanyang Avenue, Yaoxi Street, Longwan District, Wenzhou City, Zhejiang Province

The test result is copied from the test report No.: CZHL260300357101PG, Date: APR. 20, 2026.
The following sample(s) was/were submitted and identified by/on behalf of the client as:

Sample Description	:	indoor playground
Sample Quantity	:	1 SET
Manufacturer	:	Zhejiang Baihe Industrial Co., Ltd.
Supplier	:	Zhejiang Baihe Industrial Co., Ltd.
Country of Origin	:	China
Country of Destination	:	Australia
Requested Age Grading	:	3-14
		**********
Sample Receiving Date	:	MAR. 23, 2026
Testing Period	:	MAR. 23, 2026 T0 APR. 10, 2026
Testing Performed	:	SELECTED TEST(S) AS REQUESTED BY APPLICANT

No	Test Requirement	Conclusion
1	AS 4685.1-2021 Playground Equipment and surfacing Part 1: General safety requirements and test methods (EN 1176-1:2017, MOD)	Pass See remark
2	AS 4685.3-2021 Playground equipment and surfacing Part 3: Additional specific safety requirements and test methods for slides (EN 1176-3:2017, MOD)	Pass See remark
3	AS 3533.4.2-2013 Amusement rides and devices Part 4.2: Specific requirements- Contained play facilities	Pass See remark

*** FOR FURTHER DETAILS, PLEASE REFER TO THE FOLLOWING PAGE(S) ***

Signed for and on behalf of
SGS-CSTC Standards Technical Services (Changzhou) Co., Ltd.

Nature Di

Scan to see the report
CZHL260400514901PG
Verification:
check.sgsonline.com.cn

Nature Di
Authorized Signatory

Unless otherwise agreed in writing, this document is issued by the Company subject to its General Conditions of Service printed overleaf, available on request or accessible at https://www.sgs.com/en/Terms-and-Conditions. Attention is drawn to the limitation of liability, indemnification and jurisdiction issues defined therein. Any holder of this document is advised that information contained hereon reflects the Company's findings at the time of its intervention only and within the limits of Client's instructions, if any. The Company's sole responsibility is to its Client and this document does not exonerate parties to a transaction from exercising all their rights and obligations under the transaction documents. This document cannot be reproduced except in full, without prior written approval of the Company. Any unauthorized alteration, forgery or falsification of the content or appearance of this document is unlawful and offenders may be prosecuted to the fullest extent of the law. Unless otherwise stated the results shown in this test report refer only to the sample(s) tested and such sample(s) are retained for 30 days only.
Attention: To check the authenticity of testing /inspection report & certificate, please contact us at telephone: (86-755) 8307 1443, or email: CN.Doccheck@sgs.com
Building 30 and Building 18, Heimudan Science Park, Tianning District, Changzhou, Jiangsu, China 213017 t (86-519) 8558 7753 www.sgsgroup.com.cn
中国·江苏·常州市天宁区黑牡丹科技园30幢、18幢 邮编: 213017 t (86-519) 8558 7753 sgs.china@sgs.com
Member of the SGS Group (SGS SA)

Test Conducted:

1. AS 4685.1-2021 Playground Equipment and surfacing Part 1: General safety requirements and test methods (EN 1176-1:2017, MOD)

Scope:

1. This part of EN 1176 specifies general safety requirements for permanently installed public playground equipment and surfacing
2. This part of EN 1176 covers playground equipment for all children
3. It is also applicable to equipment and units installed as children's playground equipment although they are not manufactured as such, but exclude those items defined as toys in EN 71 and the Toys Safety Directive.
4. It is not applicable to adventure playgrounds with the exception of those items which have been commercially sourced. Adventure playgrounds are fenced, secured playgrounds, run and staffed in accordance with the widely accepted principles that encourage children's development and often use self-built equipment.
5. The use of electricity in play equipment, either as a play activity or as a motive force, is outside the scope of this standard.
6. Play equipment placed in water and where water can be seen as impact attenuating surfacing is not fully covered by this standard and additional risks are associated with wet environments.
7. The risk of exposure to excessive levels of UV radiation is not covered in this standard.

Sample size/weight::	5000 x 3750 x 4000 mm / 375 kg (claimed by client)	Total number of users:	10
Age range:	3-14	Number of tested samples:	1

Clause	Test Method & Test Requirement	Rating
4	Safety requirements	P
4.1	Materials	NC
4.1.1	General Materials shall conform to 4.1.2 to 4.1.6. Materials shall be selected and protected such that the structural integrity of the equipment or impact attenuating surfacing manufactured from them is not affected before the next relevant inspection and maintenance. NOTE EN 1176-7 gives recommendations on inspections and maintenance. The provisions relating to certain materials in this standard do not imply that other equivalent materials are unsuitable in the manufacture of playground equipment.	See following details

Unless otherwise agreed in writing, this document is issued by the Company subject to its General Conditions of Service printed overleaf, available on request or accessible at https://www.sgs.com/en/Terms-and-Conditions. Attention is drawn to the limitation of liability, indemnification and jurisdiction issues defined therein. Any holder of this document is advised that information contained hereon reflects the Company's findings at the time of its intervention only and within the limits of Client's instructions, if any. The Company's sole responsibility is to its Client and this document does not exonerate parties to a transaction from exercising all their rights and obligations under the transaction documents. This document cannot be reproduced except in full, without prior written approval of the Company. Any unauthorized alteration, forgery or falsification of the content or appearance of this document is unlawful and offenders may be prosecuted to the fullest extent of the law. Unless otherwise stated the results shown in this test report refer only to the sample(s) tested and such sample(s) are retained for 30 days only.
Attention: To check the authenticity of testing /inspection report & certificate, please contact us at telephone: (86-755) 8307 1443, or email: CN.Doccheck@sgs.com
Building 30 and Building 18, Heimudan Science Park, Tianning District, Changzhou, Jiangsu, China 213017 t (86-519) 8558 7753 www.sgsgroup.com.cn
中国·江苏·常州市天宁区黑牡丹科技园30幢、18幢 邮编: 213017 t (86-519) 8558 7753 sgs.china@sgs.com
Member of the SGS Group (SGS SA)

Clause	Test Method & Test Requirement	Rating
	The selection of materials and their use should be in accordance with appropriate European Standards. Special attention should be given to surface coatings to avoid potential toxic hazards. The choice of materials should be appropriate where extreme climatic or atmospheric conditions are to be expected. Care should be taken where direct skin contact is to be expected. In the choice of a material or substance for playground equipment or impact attenuating surfacing, consideration should be given to the eventual disposal of the material or substance having regard to any possible environmental toxic hazard.	
4.1.2	Flammability To avoid the risk of fire and associated hazards, materials known to produce surface flash shall not be used. Particular attention should be given to newly developed products whose properties might not be fully known. NOTE 1 Requirements for adequate exits to ensure escape in cases of fire are given in 4.2.3. NOTE 2 Attention is drawn to national and local building regulations regarding flammability for equipment installed both indoors and outdoors.	NC
4.1.3	Timber and associated products Timber parts shall be designed in such a way that precipitation can drain off freely and water accumulation shall be avoided. In cases of ground contact, one or more of the following methods shall be used: a) use of timber species with sufficient natural resistance in accordance with classes 1 and 2 of the natural resistance classification given in EN 350:2016, 5.2; b) construction methods, e.g. post shoe; c) use of timber treated with wood preservatives in accordance with EN 351-1:2007, Figure A.1, and in accordance with EN 335, use class 4. NOTE It is advised to also consider other factors which can be unsuitable, such as splintering, poisoning etc. All components made of timber and associated products, other than those species conforming to a), that affect the stability of the structure and are in constant contact with the ground shall be treated in accordance with c). When selecting metal fastenings, consideration should be given to the species of timber and chemical treatments used as some will accelerate corrosion of metals if there is contact between them. Plywood shall be in accordance with EN 636 and shall be weatherproofed.	NA
4.1.4	Metals Metal parts should be protected against atmospheric conditions and cathodic corrosion.	NC

通标标准技术服务(常州)有限公司 检验检测专用章 Inspection & Testing Services SGS-CSTC Standards Technical Services (Changzhou) Co., Ltd.

Unless otherwise agreed in writing, this document is issued by the Company subject to its General Conditions of Service printed overleaf, available on request or accessible at https://www.sgs.com/en/Terms-and-Conditions. Attention is drawn to the limitation of liability, indemnification and jurisdiction issues defined therein. Any holder of this document is advised that information contained hereon reflects the Company's findings at the time of its intervention only and within the limits of Client's instructions, if any. The Company's sole responsibility is to its Client and this document does not exonerate parties to a transaction from exercising all their rights and obligations under the transaction documents. This document cannot be reproduced except in full, without prior written approval of the Company. Any unauthorized alteration, forgery or falsification of the content or appearance of this document is unlawful and offenders may be prosecuted to the fullest extent of the law. Unless otherwise stated the results shown in this test report refer only to the sample(s) tested and such sample(s) are retained for 30 days only.
Attention: To check the authenticity of testing /inspection report & certificate, please contact us at telephone: (86-755) 8307 1443, or email: CN.Doccheck@sgs.com
Building 30 and Building 18, Heimudan Science Park, Tianning District, Changzhou, Jiangsu, China 213017 t (86-519) 8558 7753 www.sgsgroup.com.cn
中国·江苏·常州市天宁区黑牡丹科技园30幢、18幢 邮编: 213017 t (86-519) 8558 7753 sgs.china@sgs.com
Member of the SGS Group (SGS SA)

Clause	Test Method & Test Requirement	Rating
	Metals that produce toxic oxides that scale or flake shall be protected by a non-toxic coating.	
4.1.5	Synthetics If, during maintenance, it is difficult to determine at what point material becomes brittle, manufacturers shall give an indication of the time period after which the part or equipment or impact attenuating surfacing should be replaced. It should be possible for the operator of the playground to visually identify excessive wear of the gelcoat of GRP (glass-reinforced plastics) products intended for sliding before the user becomes exposed to the glass fibres. NOTE This can be achieved for example by the use of different coloured layers in the sliding surface. Consideration should also be given to degradation of structural components or impact attenuating surfacing through ultraviolet influences.	NC
4.1.6	Dangerous substances Dangerous substances shall not be used in playground equipment or impact attenuating surfacing in such a way that they can cause adverse health effects to the user of the equipment. NOTE Attention is drawn to the provisions of the REACH Regulation (EC) 1907/2006 and its successive modifications. Restricted materials include, but are not limited to, asbestos, lead, formaldehyde, coal tar oils, carbolineums, polychlorinated biphenyls (PCBs) and polycyclic aromatic hydrocarbons (PAH compounds).	NC
4.2	Design and manufacture	P
4.2.1	General Equipment where the primary play function is augmented by a secondary motion, e.g. rocking and/or rotating, shall conform to the additional parts of EN 1176 relating to both play functions, as appropriate, unless the equipment is specifically covered in just one of the additional parts of EN 1176. The dimensions and degree of difficulty of the equipment should be suitable for the intended user group. The equipment should be designed so that the risk involved in play is apparent and foreseeable by the child. NOTE For additional safety of equipment that is easily accessible, specific requirements have been included for the following: — protection against falling: a) guardrails (4.2.4.3); b) barriers (4.2.4.4); — steep elements (4.2.9.4); — easily accessible playground equipment (4.2.9.5). Except when intended for water play, all parts of playground equipment should be designed so that they do not accumulate water e.g. space beneath bouncing facility or carousel flush with the ground.	P

通标标准技术服务(常州)有限公司 检验检测专用章 Inspection & Testing Services SGS-CSTC Standards Technical Services (Changzhou) Co., Ltd.

Unless otherwise agreed in writing, this document is issued by the Company subject to its General Conditions of Service printed overleaf, available on request or accessible at https://www.sgs.com/en/Terms-and-Conditions. Attention is drawn to the limitation of liability, indemnification and jurisdiction issues defined therein. Any holder of this document is advised that information contained hereon reflects the Company's findings at the time of its intervention only and within the limits of Client's instructions, if any. The Company's sole responsibility is to its Client and this document does not exonerate parties to a transaction from exercising all their rights and obligations under the transaction documents. This document cannot be reproduced except in full, without prior written approval of the Company. Any unauthorized alteration, forgery or falsification of the content or appearance of this document is unlawful and offenders may be prosecuted to the fullest extent of the law. Unless otherwise stated the results shown in this test report refer only to the sample(s) tested and such sample(s) are retained for 30 days only.
Attention: To check the authenticity of testing /inspection report & certificate, please contact us at telephone: (86-755) 8307 1443, or email: CN.Doccheck@sgs.com
Building 30 and Building 18, Heimudan Science Park, Tianning District, Changzhou, Jiangsu, China 213017 t (86-519) 8558 7753 www.sgsgroup.com.cn
中国·江苏·常州市天宁区黑牡丹科技园30幢、18幢 邮编: 213017 t (86-519) 8558 7753 sgs.china@sgs.com
Member of the SGS Group (SGS SA)

Clause	Test Method & Test Requirement	Rating
4.2.2	Structural integrity For playground equipment, the structural integrity for the worst case of the intended combinations shall be proved. Structural integrity, including stability of the equipment shall be assessed by one of the following: a) calculation, in accordance with Annexes A and B; b) physical testing, in accordance with Annex C; or c) a combination of a) and b). When calculations are carried out in accordance with Annex B no limit states shall be exceeded at combinations of loads as given in B.2. When tested in accordance with Annex C, the equipment shall not show any cracks, damage or excessive permanent deformation (see C.1.2). Each structure shall resist both the permanent and variable loads acting on equipment and parts of equipment as described in Annex C. When playground equipment relies on one post for its stability, the construction should be carried out in order to: — minimize rotting or corrosion in parts relevant for stability; — allow for controlling degradation and the need for decommission; — be used without collapse within the foreseen inspection period when maintained correctly. NOTE 1 No allowance for accidental loads, i.e. loads produced by fire, collision by vehicles or earthquake, need to be made for playground equipment. NOTE 2 The loads associated with fatigue are in general much smaller than the loads in combination with the appropriate load factors when calculated in accordance with B.2. Therefore, playground equipment in general need not be verified for fatigue. NOTE 3 For one post equipment at installation stage, it is advised to consider access to foundations to control rotting or degradation; the choice of impact attenuating surfacing material can have implications on inspections to foundations. Structural parts shall resist the worst case loading condition. NOTE 4 To achieve this, it might be necessary to remove that part of the user load causing favourable effects, as shown in Figure 7.	P After loaded 1165 kg on the platform, no cracks, damage or excessive permanent deformation was found.
4.2.3	Accessibility for adults Playground equipment shall be designed to ensure that adults are able to gain access to assist children within the equipment. Enclosed parts of the equipment such as tunnels and playhouses, with an internal distance greater than 2 000 mm from an entry point shall have at least two access openings that are independent of one another and situated on different sides of the equipment. These openings shall not be capable of being locked and shall be accessible without any additional aids (e.g. a ladder that is not an integral part of the equipment). These access openings shall have no dimension less than 500 mm. Because of the risk of fire, these two openings shall allow the user to leave the equipment by different routes.	P

通标标准技术服务(常州)有限公司 检验检测专用章 Inspection & Testing Services SGS-CSTC Standards Technical Services (Changzhou) Co., Ltd. Hardlines

Unless otherwise agreed in writing, this document is issued by the Company subject to its General Conditions of Service printed overleaf, available on request or accessible at https://www.sgs.com/en/Terms-and-Conditions. Attention is drawn to the limitation of liability, indemnification and jurisdiction issues defined therein. Any holder of this document is advised that information contained hereon reflects the Company's findings at the time of its intervention only and within the limits of Client's instructions, if any. The Company's sole responsibility is to its Client and this document does not exonerate parties to a transaction from exercising all their rights and obligations under the transaction documents. This document cannot be reproduced except in full, without prior written approval of the Company. Any unauthorized alteration, forgery or falsification of the content or appearance of this document is unlawful and offenders may be prosecuted to the fullest extent of the law. Unless otherwise stated the results shown in this test report refer only to the sample(s) tested and such sample(s) are retained for 30 days only.
Attention: To check the authenticity of testing /inspection report & certificate, please contact us at telephone: (86-755) 8307 1443, or email: CN.Doccheck@sgs.com
Building 30 and Building 18, Heimudan Science Park, Tianning District, Changzhou, Jiangsu, China 213017 t (86-519) 8558 7753 www.sgsgroup.com.cn
中国·江苏·常州市天宁区黑牡丹科技园30幢、18幢 邮编: 213017 t (86-519) 8558 7753 sgs.china@sgs.com
Member of the SGS Group (SGS SA)

Clause	Test Method & Test Requirement	Rating
4.2.4	Protection against falling	P
4.2.4.1	General Different types of protection against falling from elevated platforms are required. The type of protection required will depend on the free height of fall and on the type of equipment, whether it is easily accessible or not (see 4.2.4.3 and 4.2.4.4). See Figure 8 and Annex F. When installed on ramps or stairs, handrails, guardrails or barriers shall commence at the lowest position on the ramp or stairs.	See following details
4.2.4.2	Handrails Handrails shall be not less than 600 mm and not more than 850 mm above the foot position (see Figure 9). As a minimum, handrails shall conform to the requirements for grasp (see 4.2.4.7).	P Height: 605 mm
4.2.4.3	Guardrails For equipment other than that which is easily accessible, guardrails shall be provided when the platform is 1 000 mm to 2 000 mm above the playing surface (see Figure 8b)). The height to the top of the guardrail shall be not less than 600 mm and not more than 850 mm measured from the surface of the platform, stairs or ramp. Guardrails shall completely surround the platform except for entrance and exit openings necessary for each play element. The width of entrance and exit openings in guardrails, with the exception of stairs, ramps and bridges, shall have a maximum clear opening of 500 mm, when measured horizontally at a position, with a height between 600 mm to 850 mm from the platform. For stairs, ramps and bridges the width of the exit opening in the guardrail shall be no greater than the width of these elements	P
4.2.4.4	Barriers Except for entrance and exit openings necessary for each play element, barriers shall completely surround the platform. The width of entrance and exit openings in barriers shall have a clear opening of 500 mm maximum, when measured horizontally at any point (see Figure 10a)), unless a guardrail is provided across the opening (see Figure 10b) and Figure 10c)). For stairs, ramps, bridges, etc. that have additional barriers as part of their structure, the width of the exit opening in the barrier shall be no greater than the width of these elements. There shall be no intermediate horizontal or near horizontal rails or bars that can be used as steps by children attempting to climb. The design of the top of the barriers should not encourage children to stand or sit on them, nor should any infilling encourage climbing. Openings between the platform surface and the lower edge of the barrier and between any infilling elements shall not allow passage of the probe C.	P

Unless otherwise agreed in writing, this document is issued by the Company subject to its General Conditions of Service printed overleaf, available on request or accessible at https://www.sgs.com/en/Terms-and-Conditions. Attention is drawn to the limitation of liability, indemnification and jurisdiction issues defined therein. Any holder of this document is advised that information contained hereon reflects the Company's findings at the time of its intervention only and within the limits of Client's instructions, if any. The Company's sole responsibility is to its Client and this document does not exonerate parties to a transaction from exercising all their rights and obligations under the transaction documents. This document cannot be reproduced except in full, without prior written approval of the Company. Any unauthorized alteration, forgery or falsification of the content or appearance of this document is unlawful and offenders may be prosecuted to the fullest extent of the law. Unless otherwise stated the results shown in this test report refer only to the sample(s) tested and such sample(s) are retained for 30 days only.
Attention: To check the authenticity of testing /inspection report & certificate, please contact us at telephone: (86-755) 8307 1443, or email: CN.Doccheck@sgs.com
Building 30 and Building 18, Heimudan Science Park, Tianning District, Changzhou, Jiangsu, China 213017 t (86-519) 8558 7753 www.sgsgroup.com.cn
中国·江苏·常州市天宁区黑牡丹科技园30幢、18幢 邮编: 213017 t (86-519) 8558 7753 sgs.china@sgs.com
Member of the SGS Group (SGS SA)

Clause	Test Method & Test Requirement	Rating
	For easily accessible equipment, barriers shall be provided when the platform is more than 600 mm above the playing surface (see Figure 8a)). For equipment other than easily accessible, barriers shall be provided when the platform is more than 2 000 mm above the playing surface (see Figure 8b)). The height to the top of the barrier shall be at least 700 mm measured from the surface of the platform, stairs or ramp. Openings in the barrier of easily accessible equipment/parts of equipment that give access to steep play elements shall conform to the requirements of 4.2.9.4. For all other equipment, openings in the barrier provided with a guardrail, which give access to steep play elements, shall not be greater than 1 200 mm (see Figure 10c)).	
4.2.4.5	Strength requirements Barriers and guardrails shall conform to 4.2.2.	P
4.2.4.6	Grip requirements The cross-section of any support designed to be gripped for support of full body weight (see 3.16 and Figure 5) shall have a dimension of not less than 16 mm or more than 45 mm in any direction, when measured across its centre.	P
4.2.4.7	Grasp requirements The cross-section of any support designed to be grasped (see 3.17 and Figure 6) shall have a width not exceeding 60 mm.	P
4.2.5	Finish of equipment Wooden equipment shall be made of wood with a low susceptibility to splintering. The surface finish of equipment made of other materials (e.g. glass fibre) shall be non-splintering. There shall be no protruding nails, projecting wire rope terminations or pointed or sharp-edged components. Rough surfaces should not present any risk of injury. Protruding bolt threads within any accessible part of the equipment shall be permanently covered, e.g. dome headed nuts. Nuts and bolt heads that project less than 8 mm shall be free from burrs. NOTE 1 Figure 11 shows examples of protection for nuts and bolts. Corners, edges and projecting parts within the space occupied by the user that protrude more than 8 mm, and which are not shielded by adjacent areas that are not more than 25 mm from the end of the projecting part, shall be rounded off. The minimum radius of the curve shall be 3 mm. NOTE 2 This requirement is intended only to prevent injuries caused by unintended contact with components. Corners, edges and projections with a radius less than 3 mm may be in other accessible parts of the equipment only if they are not sharp.	P

通标标准技术服务(常州)有限公司 检验检测专用章 Inspection & Testing Services SGS-CSTC Standards Technical Services (Changzhou) Co., Ltd.

Unless otherwise agreed in writing, this document is issued by the Company subject to its General Conditions of Service printed overleaf, available on request or accessible at https://www.sgs.com/en/Terms-and-Conditions. Attention is drawn to the limitation of liability, indemnification and jurisdiction issues defined therein. Any holder of this document is advised that information contained hereon reflects the Company's findings at the time of its intervention only and within the limits of Client's instructions, if any. The Company's sole responsibility is to its Client and this document does not exonerate parties to a transaction from exercising all their rights and obligations under the transaction documents. This document cannot be reproduced except in full, without prior written approval of the Company. Any unauthorized alteration, forgery or falsification of the content or appearance of this document is unlawful and offenders may be prosecuted to the fullest extent of the law. Unless otherwise stated the results shown in this test report refer only to the sample(s) tested and such sample(s) are retained for 30 days only.
Attention: To check the authenticity of testing /inspection report & certificate, please contact us at telephone: (86-755) 8307 1443, or email: CN.Doccheck@sgs.com
Building 30 and Building 18, Heimudan Science Park, Tianning District, Changzhou, Jiangsu, China 213017 t (86-519) 8558 7753 www.sgsgroup.com.cn
中国·江苏·常州市天宁区黑牡丹科技园30幢、18幢 邮编: 213017 t (86-519) 8558 7753 sgs.china@sgs.com
Member of the SGS Group (SGS SA)

Clause	Test Method & Test Requirement	Rating
4.2.6	Moving parts There shall be no crushing points or shearing points between moving and/or stationary parts of the equipment, in accordance with 4.2.7. Parts from which a high impact force can emanate should have an attenuating construction. If moving parts of the equipment can endanger the body, there shall be a ground clearance of at least 400 mm.	NA
4.2.7	Protection again entrapment	P
4.2.7.1	General When choosing materials, the manufacturer should take into account the entrapment hazards that can occur through distortion of materials during use. NOTE 1 Test methods for entrapment are given in Annex D. NOTE 2 Possible entrapment situations are illustrated in Annex E. Openings shall have no parts that converge in the downward direction at an angle of less than 60° taking into consideration the following conditions (4.2.7.2).	P
4.2.7.2	Entrapment of the head and neck Equipment shall be constructed so that any openings do not create head and neck entrapment hazards either by head first or feet first passage. Hazardous situations in which this type of entrapment can be encountered include the following: — completely bound openings through which a user can slide feet first or head first; — partially bound or V-shaped openings; — other openings (e.g. shearing or moving openings). a) Completely bound openings: Accessible completely bound openings with a lower edge more than 600 mm above the playing surface (see 3.5) shall be tested in accordance with D.2.1. Probes C or E shall not pass through any opening unless it also allows the passage of the large head probe D. NOTE 1 Probe C represents a ‘feet first’ passage to an opening and probe E represents a ‘head first’ passage. b) Partially bound and V-shaped openings: Partially bound and V-shaped openings with an entrance at 600 mm or more above the ground shall be constructed so that either: 1) opening is not accessible when tested in accordance with D.2.2; or 2) if accessible at a position of 600 mm or more above ground when tested in accordance with D.2.2, depending on the angular orientation range of the opening (see Figure D.4), shall conform to the following: — Range 1: (template centre line ± 45° from vertical); when the template apex contacts the base of the opening, the depth of the opening shall be	P

通标标准技术服务（常州）有限公司 检验检测专用章 Inspection & Testing Services SGS-CSTC Standards Technical Services (Changzhou) Co., Ltd. Hardlines

Unless otherwise agreed in writing, this document is issued by the Company subject to its General Conditions of Service printed overleaf, available on request or accessible at https://www.sgs.com/en/Terms-and-Conditions. Attention is drawn to the limitation of liability, indemnification and jurisdiction issues defined therein. Any holder of this document is advised that information contained hereon reflects the Company's findings at the time of its intervention only and within the limits of Client's instructions, if any. The Company's sole responsibility is to its Client and this document does not exonerate parties to a transaction from exercising all their rights and obligations under the transaction documents. This document cannot be reproduced except in full, without prior written approval of the Company. Any unauthorized alteration, forgery or falsification of the content or appearance of this document is unlawful and offenders may be prosecuted to the fullest extent of the law. Unless otherwise stated the results shown in this test report refer only to the sample(s) tested and such sample(s) are retained for 30 days only.
Attention: To check the authenticity of testing /inspection report & certificate, please contact us at telephone: (86-755) 8307 1443, or email: CN.Doccheck@sgs.com
Building 30 and Building 18, Heimudan Science Park, Tianning District, Changzhou, Jiangsu, China 213017 t (86-519) 8558 7753 www.sgsgroup.com.cn
中国·江苏·常州市天宁区黑牡丹科技园30幢、18幢 邮编：213017 t (86-519) 8558 7753 sgs.china@sgs.com
Member of the SGS Group (SGS SA)

Clause	Test Method & Test Requirement	Rating
	less than the length of the template to the underside of the shoulder section. — Range 2: (template centre line from horizontal to + 45°); when the template apex contacts the base of the opening, the depth of the opening shall be less than the 'A' portion of the template. If the depth of the opening is greater than the 'A' portion of the template all parts of the opening above the 'A' portion shall also allow insertion of the shoulder section of the template or probe D. — Range 3: No template test requirements. c) Other openings (e.g. shearing or moving openings): Non-rigid members (for example ropes) shall not overlap if, by doing so, they create openings that do not conform to the requirements for completely bound openings. Openings between the flexible parts of suspended bridges and any rigid side members shall be not less than 230 mm in diameter under the worst case condition of loading (see 4.2.2). Both loaded and unloaded situations shall be considered. NOTE 2 This requirement relates to the potential change in dimensions as a result of the stretching of bridge flexible supports (e.g. wire) over time. A typical suspended bridge is illustrated in Figure 12.	
4.2.7.3	Entrapment of clothing/hair Equipment should be constructed so that hazardous situations including the following, in which clothing entrapment can be encountered, are not created: a) gaps or V-shaped openings in which a part of clothing can become trapped while or immediately before the user is undergoing a forced movement; b) protrusions; and c) spindles/rotating parts. NOTE 1 The toggle test (see D.3) is restricted to the free space as practical experience has shown that natural materials and connections between different parts can vary over time. The definition of free space (see 3.5) does not include the three-dimensional area in which the falling movement takes place. Special consideration should be given when using elements of circular cross-section, e.g. round tubes or poles, to avoid clothing entanglement within the falling space. NOTE 2 This can be achieved by use of spacers or similar devices. Slides and fireman's poles shall be constructed so that openings located within the free space do not trap the toggle when tested in accordance with D.3. Roofs shall be constructed so that they do not trap the toggle when tested in accordance with D.3. Spindles and rotating parts shall be constructed so as to prevent entanglement of clothing or hair. NOTE 3 This can be achieved by use of suitable covering or shields.	P
4.2.7.4	Entrapment of the whole body	P

通标标准技术服务(常州)有限公司 检验检测专用章 Inspection & Testing Services SGS-CSTC Standards Technical Services (Changzhou) Co., Ltd. Hardlines

Unless otherwise agreed in writing, this document is issued by the Company subject to its General Conditions of Service printed overleaf, available on request or accessible at https://www.sgs.com/en/Terms-and-Conditions. Attention is drawn to the limitation of liability, indemnification and jurisdiction issues defined therein. Any holder of this document is advised that information contained hereon reflects the Company's findings at the time of its intervention only and within the limits of Client's instructions, if any. The Company's sole responsibility is to its Client and this document does not exonerate parties to a transaction from exercising all their rights and obligations under the transaction documents. This document cannot be reproduced except in full, without prior written approval of the Company. Any unauthorized alteration, forgery or falsification of the content or appearance of this document is unlawful and offenders may be prosecuted to the fullest extent of the law. Unless otherwise stated the results shown in this test report refer only to the sample(s) tested and such sample(s) are retained for 30 days only.
Attention: To check the authenticity of testing /inspection report & certificate, please contact us at telephone: (86-755) 8307 1443, or email: CN.Doccheck@sgs.com
Building 30 and Building 18, Heimudan Science Park, Tianning District, Changzhou, Jiangsu, China 213017 t (86-519) 8558 7753 www.sgsgroup.com.cn
中国·江苏·常州市天宁区黑牡丹科技园30幢、18幢 邮编: 213017 t (86-519) 8558 7753 sgs.china@sgs.com
Member of the SGS Group (SGS SA)

Clause	Test Method & Test Requirement	Rating
	Equipment should be constructed so that the following hazardous situations, which might cause entrapment, are not created: a) tunnels into which children can crawl with their whole body; and b) suspended parts which are heavy or have rigid suspension. Tunnels shall have a maximum length of 10 000 mm and conform to the requirements given in Table 1.	
4.2.7.5	Entrapment of the foot or leg Equipment should be constructed so that the following hazardous situations, which might cause entrapment, are not created: a) completely bound rigid openings in surfaces on which children can run or climb; and b) footholds, handholds, etc. extending from these surfaces. NOTE In the case of b) the entrapped foot or ankle can be severely injured if the user falls. Surfaces intended for running/walking shall not contain gaps likely to cause foot or leg entrapment. Gaps in the main direction of travel shall not be greater than 30 mm when measured across the direction of travel (see Figure 13). This requirement does not apply to surfaces inclined more than 38° from the horizontal	P
4.2.7.6	Entrapment of fingers Equipment should be constructed so that the following hazardous situations, which may cause entrapment, are not created: a) gaps in which fingers can be trapped whilst the remainder of the body is moving or continues in forced movement, for example sliding, swinging; and b) variable gaps (excluding chains). Openings within the free space, where the user is subjected to forced movement, and/or holes which have a lower edge more than 1 000 mm above the potential impact area, when tested in accordance with D.4, shall conform to one of the following requirements: NOTE 1 Openings include tubes and pipes. c) the 8 mm finger rod (see Figure D.10a)) shall not pass through the minimum cross-section of the opening and the profile of the opening shall	P

Dimensions in millimetres

Requirements	Open one end	Open both ends			
Inclination	≤ 5° and upwards only when entering	≤ 15°			> 15°
Minimum internal dimension [a]	≥ 750	≥ 400	≥ 500	≥ 750	≥ 750
Length	≤ 2 000	≤ 1 000	≤ 2 000	≤ 10 000	≤ 10 000
Other requirements	None	None	None	None	Provision for climbing e.g. steps or handles
NOTE For tunnel slides, see EN 1176-3.					
[a] Measured at the narrowest point.					

Unless otherwise agreed in writing, this document is issued by the Company subject to its General Conditions of Service printed overleaf, available on request or accessible at https://www.sgs.com/en/Terms-and-Conditions. Attention is drawn to the limitation of liability, indemnification and jurisdiction issues defined therein. Any holder of this document is advised that information contained hereon reflects the Company's findings at the time of its intervention only and within the limits of Client's instructions, if any. The Company's sole responsibility is to its Client and this document does not exonerate parties to a transaction from exercising all their rights and obligations under the transaction documents. This document cannot be reproduced except in full, without prior written approval of the Company. Any unauthorized alteration, forgery or falsification of the content or appearance of this document is unlawful and offenders may be prosecuted to the fullest extent of the law. Unless otherwise stated the results shown in this test report refer only to the sample(s) tested and such sample(s) are retained for 30 days only.
Attention: To check the authenticity of testing /inspection report & certificate, please contact us at telephone: (86-755) 8307 1443, or email: CN.Doccheck@sgs.com
Building 30 and Building 18, Heimudan Science Park, Tianning District, Changzhou, Jiangsu, China 213017 t (86-519) 8558 7753 www.sgsgroup.com.cn
中国·江苏·常州市天宁区黑牡丹科技园30幢、18幢 邮编: 213017 t (86-519) 8558 7753 sgs.china@sgs.com
Member of the SGS Group (SGS SA)

Clause	Test Method & Test Requirement	Rating
	be such that the rod cannot be locked in any position when set in motion as given in D.4.2; or d) if the 8 mm finger rod passes through the opening, the 25 mm finger rod (see Figure D.10b)) shall also pass through the opening, provided that the opening does not permit access to another finger entrapment site. NOTE 2 Only to be used where there is a potential fall to an impact area below. See also adjacent platforms (4.2.8.5.4). NOTE 3 The test process D.4.2 for finger entrapment will only be conducted with the presence of free space and/or falling space. The ends of tubes and pipes shall be closed off to prevent the risk of finger entrapment. The closures shall not be removable without using tools. Gaps whose dimensions change during use of the equipment shall have a minimum dimension in any position of 12 mm. Splits in single pieces of wood shall not be considered as finger entrapment where the gap diminishes towards the centre of the wooden part.	
4.2.8	Protection against injuries during movement and falling	P
4.2.8.1	Determination of free height of fall Unless stated otherwise, determination of free height of fall shall be as given in Table 2. In determining the free height of fall, the possible movements of the equipment and of the user shall be taken into account. In general, this means that the maximum movement of the equipment shall be taken. In the case of roofs, or other features not intended for play, it is not required for them to be included in the free height of fall where access has not been encouraged. EXAMPLE Some examples of features that could encourage access are: — play feature, which can be accessed from the roof; — hand and foot holds for climbing; — arm or leg reach distance; — inclination of the roof; — roughness of the roof surface. The free height of fall (h) shall not exceed 3 000 mm (see Figure 14). For the determination of free height of fall, see Table 2.	P
4.2.8.2	Determination of spaces and areas	P
4.2.8.2.1	General The requirements for falling space and impact area within this standard are intended to offer some protection to users during the first impact of a potential fall.These spaces and areas will also afford some protection to other users who might be circulating around the equipment items,but these requirements should be considered in addition to this standard as they are likely to be site specific and may be subject to national control.In particular the attention of the play area designer is directed to possible hazards associated with the close proximity of play structures intended for users of greatly different age groups and those in highly populated play	P

通标标准技术服务(常州)有限公司 检验检测专用章 Inspection & Testing Services SGS-CSTC Standards Technical Services (Changzhou) Co.,Ltd. Hardlines

Unless otherwise agreed in writing, this document is issued by the Company subject to its General Conditions of Service printed overleaf, available on request or accessible at https://www.sgs.com/en/Terms-and-Conditions. Attention is drawn to the limitation of liability, indemnification and jurisdiction issues defined therein. Any holder of this document is advised that information contained hereon reflects the Company's findings at the time of its intervention only and within the limits of Client's instructions, if any. The Company's sole responsibility is to its Client and this document does not exonerate parties to a transaction from exercising all their rights and obligations under the transaction documents. This document cannot be reproduced except in full, without prior written approval of the Company. Any unauthorized alteration, forgery or falsification of the content or appearance of this document is unlawful and offenders may be prosecuted to the fullest extent of the law. Unless otherwise stated the results shown in this test report refer only to the sample(s) tested and such sample(s) are retained for 30 days only.
Attention: To check the authenticity of testing /inspection report & certificate, please contact us at telephone: (86-755) 8307 1443, or email: CN.Doccheck@sgs.com
Building 30 and Building 18, Heimudan Science Park, Tianning District, Changzhou, Jiangsu, China 213017 t (86-519) 8558 7753 www.sgsgroup.com.cn
中国·江苏·常州市天宁区黑牡丹科技园30幢、18幢 邮编: 213017 t (86-519) 8558 7753 sgs.china@sgs.com
Member of the SGS Group (SGS SA)

Clause	Test Method & Test Requirement	Rating
	areas such as those found in some schools. Care should be taken with seated dynamic equipment with significant motion,e.g.swings and certain types of rocking equipment,to discourage users of the surrounding play area from unintentionally coming into contact with the equipment.This can be achieved,for example,by placing the equipment at the perimeter of the play area.	
4.2.8.2.2	Minimum space The minimum space shall consist of the following: a) space occupied by the equipment; b) free space,if any;and c) falling space.	P
4.2.8.2.3	Free space The free space is a series of cylindrical spaces representing the user (see Figure 15),originating from and perpendicular to the body bearing surface,along the forced path of the user. The cylindrical space is shown in Figure 16 and its dimensions are given in Table 3.In determining the free space,the possible movements of the equipment and the user shall be taken into account. Fireman's poles that are accessed via a platform or other starting point shall have a clearance of at least 350 mm from the pole to the edge of the adjacent structure. NOTE 1 This is to allow safe grabbing of the pole while reducing the risk of head impact on the adjacent structure.	P

通标标准技术服务(常州)有限公司 检验检测专用章 Inspection & Testing Services SGS-CSTC Standards Technical Services (Changzhou) Co.,Ltd.

Unless otherwise agreed in writing, this document is issued by the Company subject to its General Conditions of Service printed overleaf, available on request or accessible at https://www.sgs.com/en/Terms-and-Conditions. Attention is drawn to the limitation of liability, indemnification and jurisdiction issues defined therein. Any holder of this document is advised that information contained hereon reflects the Company's findings at the time of its intervention only and within the limits of Client's instructions, if any. The Company's sole responsibility is to its Client and this document does not exonerate parties to a transaction from exercising all their rights and obligations under the transaction documents. This document cannot be reproduced except in full, without prior written approval of the Company. Any unauthorized alteration, forgery or falsification of the content or appearance of this document is unlawful and offenders may be prosecuted to the fullest extent of the law. Unless otherwise stated the results shown in this test report refer only to the sample(s) tested and such sample(s) are retained for 30 days only.
Attention: To check the authenticity of testing /inspection report & certificate, please contact us at telephone: (86-755) 8307 1443, or email: CN.Doccheck@sgs.com
Building 30 and Building 18, Heimudan Science Park, Tianning District, Changzhou, Jiangsu, China 213017 t (86-519) 8558 7753 www.sgsgroup.com.cn
中国·江苏·常州市天宁区黑牡丹科技园30幢、18幢 邮编: 213017 t (86-519) 8558 7753 sgs.china@sgs.com
Member of the SGS Group (SGS SA)

Clause	Test Method & Test Requirement	Rating
	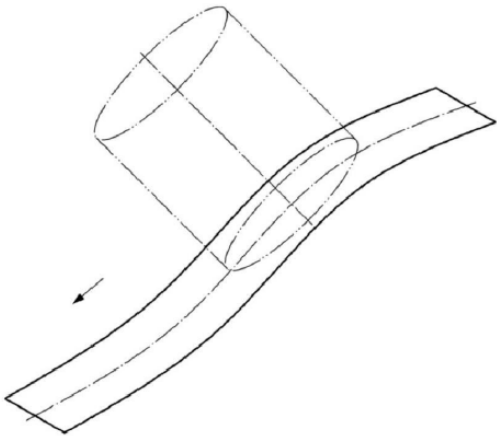 **Figure 15—Determination of the free space;example of a slide** 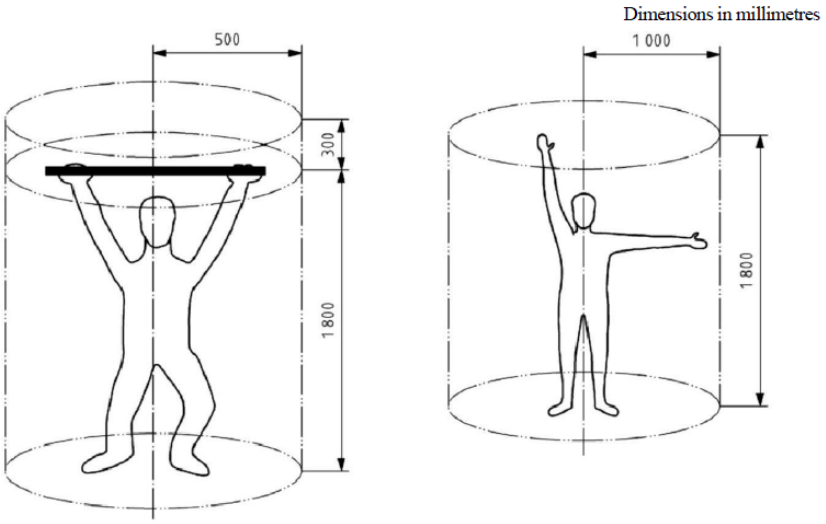 **a)Hanging user** **b)Standing user** **Figure 16—Cylindrical space** NOTE 2 In certain cases,the dimensions of the free space can be altered. In some cases, these will be given in the parts of this standard covering individual types of equipment.	
4.2.8.2.4	Extent of the impact area Dimensions of the impact area are shown in Figure 17. In certain cases,such as a carousel giving the user a horizontal speed,the impact area may be extended to provide adequate protection against falling injuries. In determining the impact area,the possible movements of the equipment and the user shall be taken into account.	NC

Unless otherwise agreed in writing, this document is issued by the Company subject to its General Conditions of Service printed overleaf, available on request or accessible at https://www.sgs.com/en/Terms-and-Conditions. Attention is drawn to the limitation of liability, indemnification and jurisdiction issues defined therein. Any holder of this document is advised that information contained hereon reflects the Company's findings at the time of its intervention only and within the limits of Client's instructions, if any. The Company's sole responsibility is to its Client and this document does not exonerate parties to a transaction from exercising all their rights and obligations under the transaction documents. This document cannot be reproduced except in full, without prior written approval of the Company. Any unauthorized alteration, forgery or falsification of the content or appearance of this document is unlawful and offenders may be prosecuted to the fullest extent of the law. Unless otherwise stated the results shown in this test report refer only to the sample(s) tested and such sample(s) are retained for 30 days only.
Attention: To check the authenticity of testing /inspection report & certificate, please contact us at telephone: (86-755) 8307 1443, or email: CN.Doccheck@sgs.com
Building 30 and Building 18, Heimudan Science Park, Tianning District, Changzhou, Jiangsu, China 213017 t (86-519) 8558 7753 www.sgsgroup.com.cn
中国·江苏·常州市天宁区黑牡丹科技园30幢、18幢 邮编: 213017 t (86-519) 8558 7753 sgs.china@sgs.com
Member of the SGS Group (SGS SA)

Clause	Test Method & Test Requirement	Rating
	NOTE These cases are also covered in the parts of this standard covering individual types of equipment.	
4.2.8.2.5	Extent of the falling space Unless otherwise specified, the extent of the falling space shall be at least 1500 mm around elevated parts of the equipment, measured horizontally and extending from the vertical projection plane below the equipment. The falling space shall increase for free heights of fall above 1500 mm together with the extent of the impact area (see 4.2.8.2.4).This requirement can be varied in certain cases, e.g. increased, in the case of forced movement or reduced, in the case of equipment installed on or against a wall or fully enclosed equipment. In most cases there may be overlapping of falling spaces including impact areas. Unless specified in other parts of this standard, overlapping of the falling space where forced movement exists should not occur.Where two items with different fall heights are sited together the larger of the two impact areas will take precedence. Examples of falling space are given in Figures 18 and 19. 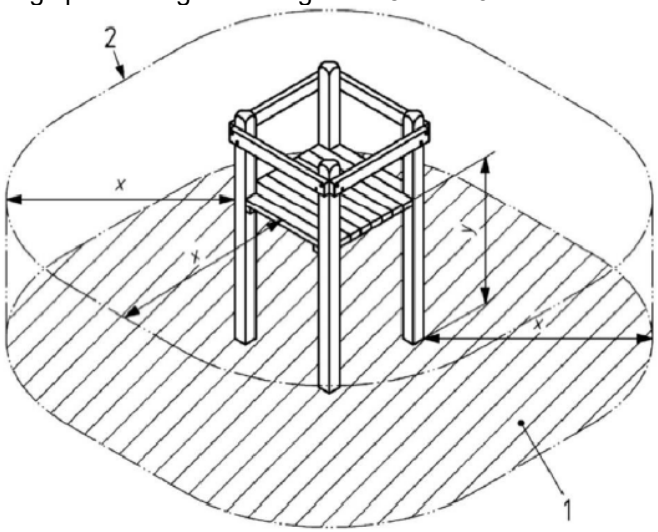 **Key** 1 impact area 2 falling space x extent of falling space y height of falling space **Figure 18—Example of falling space and impact area of a platform**	NC

Unless otherwise agreed in writing, this document is issued by the Company subject to its General Conditions of Service printed overleaf, available on request or accessible at https://www.sgs.com/en/Terms-and-Conditions. Attention is drawn to the limitation of liability, indemnification and jurisdiction issues defined therein. Any holder of this document is advised that information contained hereon reflects the Company's findings at the time of its intervention only and within the limits of Client's instructions, if any. The Company's sole responsibility is to its Client and this document does not exonerate parties to a transaction from exercising all their rights and obligations under the transaction documents. This document cannot be reproduced except in full, without prior written approval of the Company. Any unauthorized alteration, forgery or falsification of the content or appearance of this document is unlawful and offenders may be prosecuted to the fullest extent of the law. Unless otherwise stated the results shown in this test report refer only to the sample(s) tested and such sample(s) are retained for 30 days only.
Attention: To check the authenticity of testing /inspection report & certificate, please contact us at telephone: (86-755) 8307 1443, or email: CN.Doccheck@sgs.com
Building 30 and Building 18, Heimudan Science Park, Tianning District, Changzhou, Jiangsu, China 213017 t (86-519) 8558 7753 www.sgsgroup.com.cn
中国·江苏·常州市天宁区黑牡丹科技园30幢、18幢 邮编: 213017 t (86-519) 8558 7753 sgs.china@sgs.com
Member of the SGS Group (SGS SA)

Clause	Test Method & Test Requirement	Rating
	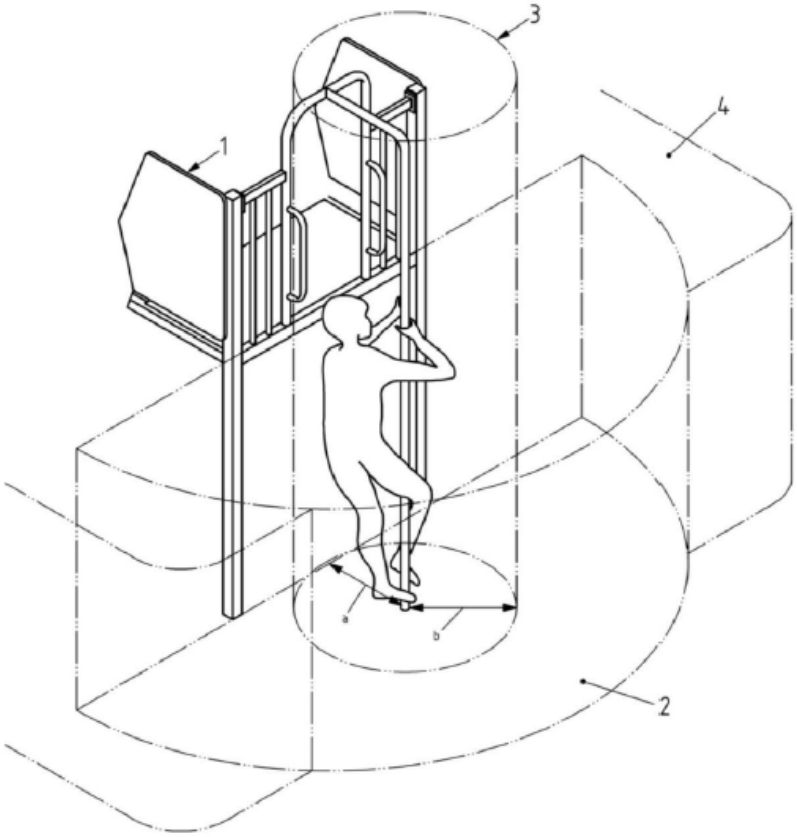 **Key** 1 space occupied by the equipment 2 falling space of the fireman's pole 3 free space of the fireman's pole 4 falling space of platform a fireman's pole minimum clearance (see 4.2.8.3) b free space radius (see 4.2.8.2.3) **Figure 19—Example of falling space and free space of a fireman's pole**	
4.2.8.3	Protection against injuries in the free space for users undergoing a movement that is forced by the equipment Unless stated otherwise, there shall be no overlapping of adjacent free spaces, or of free space and falling space of two different pieces of equipment. NOTE 1 This requirement does not apply to the common space between pieces of equipment in a cluster. The free space shall not contain any obstacles that interfere with the passage of a user whilst undergoing a forced movement e.g. tree branches, ropes, cross beams etc. Parts of the equipment bearing or containing the user, or helping the user to keep balance, shall be permitted within the free space, e.g. a platform with a fireman's pole (see 4.2.8.2.3).	P

Unless otherwise agreed in writing, this document is issued by the Company subject to its General Conditions of Service printed overleaf, available on request or accessible at https://www.sgs.com/en/Terms-and-Conditions. Attention is drawn to the limitation of liability, indemnification and jurisdiction issues defined therein. Any holder of this document is advised that information contained hereon reflects the Company's findings at the time of its intervention only and within the limits of Client's instructions, if any. The Company's sole responsibility is to its Client and this document does not exonerate parties to a transaction from exercising all their rights and obligations under the transaction documents. This document cannot be reproduced except in full, without prior written approval of the Company. Any unauthorized alteration, forgery or falsification of the content or appearance of this document is unlawful and offenders may be prosecuted to the fullest extent of the law. Unless otherwise stated the results shown in this test report refer only to the sample(s) tested and such sample(s) are retained for 30 days only.
Attention: To check the authenticity of testing /inspection report & certificate, please contact us at telephone: (86-755) 8307 1443, or email: CN.Doccheck@sgs.com
Building 30 and Building 18, Heimudan Science Park, Tianning District, Changzhou, Jiangsu, China 213017 t (86-519) 8558 7753 www.sgsgroup.com.cn
中国·江苏·常州市天宁区黑牡丹科技园30幢、18幢 邮编: 213017 t (86-519) 8558 7753 sgs.china@sgs.com
Member of the SGS Group (SGS SA)

Clause	Test Method & Test Requirement	Rating
	Fireman's poles that are accessed via a platform or other starting point shall have a clearance of at least 350 mm from the pole to the edge of the adjacent structure. (4.2.8.2.3) NOTE 2 Exceptions to this requirement are given in the parts of this standard covering individual types of equipment. The free space shall not be intersected by main travelling routes at, or through, the playground (e.g. pedestrian pathway). **Table 3 — Dimensions of the cylinder for the determination of the free space** Dimensions in millimetres Type of use / Radius / Height Standing / 1 000 / 1 800 Sitting / 1 000 / 1 500 Hanging / 500 / 300 above and 1 800 below hanging grip position NOTE In case of hanging, h = 300 mm because of the possibility that the users pull themselves up [see Figure 16a)]. NOTE 2 In certain cases, the dimensions of the free space can be altered. In some cases, these will be given in the parts of this standard covering individual types of equipment.	
4.2.8.4	Protection against injuries in the falling space The falling space shall not contain any obstacles onto which a user could fall and cause injuries, e.g. posts not flush with adjacent parts or exposed foundations (see 4.2.14). The falling space shall increase for free heights of fall above 1 500 mm together with the extent of the impact area In most cases there may be overlapping of falling spaces including impact areas. Unless specified in other parts of this standard, overlapping of the falling space where forced movement exists should not occur. (4.2.8.2.5) NOTE 1 The intention of this requirement is not to protect the user from minor knocks or bumps, that might lead to a bruise or sprain etc., as these types of injuries are possible in all situations. The following parts of play structures may be in the falling space: — adjacent parts of play structures with a difference in free height of fall of less than 600 mm; — parts of the equipment bearing or containing the user, or helping the user to keep balance; — parts of the equipment with an inclination of 60° or more from the horizontal. NOTE 2 In this case a falling user would only make a glancing contact with the equipment part.	P
4.2.8.5	Protection against injuries from the surface of the impact area	NC
4.2.8.5.1	General	NC

Unless otherwise agreed in writing, this document is issued by the Company subject to its General Conditions of Service printed overleaf, available on request or accessible at https://www.sgs.com/en/Terms-and-Conditions. Attention is drawn to the limitation of liability, indemnification and jurisdiction issues defined therein. Any holder of this document is advised that information contained hereon reflects the Company's findings at the time of its intervention only and within the limits of Client's instructions, if any. The Company's sole responsibility is to its Client and this document does not exonerate parties to a transaction from exercising all their rights and obligations under the transaction documents. This document cannot be reproduced except in full, without prior written approval of the Company. Any unauthorized alteration, forgery or falsification of the content or appearance of this document is unlawful and offenders may be prosecuted to the fullest extent of the law. Unless otherwise stated the results shown in this test report refer only to the sample(s) tested and such sample(s) are retained for 30 days only.
Attention: To check the authenticity of testing /inspection report & certificate, please contact us at telephone: (86-755) 8307 1443, or email: CN.Doccheck@sgs.com
Building 30 and Building 18, Heimudan Science Park, Tianning District, Changzhou, Jiangsu, China 213017 t (86-519) 8558 7753 www.sgsgroup.com.cn
中国·江苏·常州市天宁区黑牡丹科技园30幢、18幢 邮编: 213017 t (86-519) 8558 7753 sgs.china@sgs.com
Member of the SGS Group (SGS SA)

Clause	Test Method & Test Requirement	Rating
	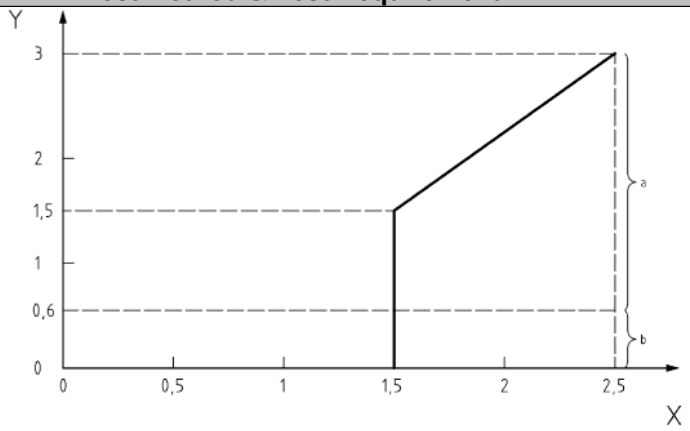 **Key** Y free height of fall X minimum dimension of impact area a impact attenuating surfacing with requirements (4.2.8.5.2) b surface with no impact attenuation test requirements, unless there is forced movement (4.2.8.5.3) If $0 \le Y \le 1,5$ then $X = 1,5$ (in metres) If $Y > 1,5$, then $X = 2/3\ Y + 0,5$ The surface of the impact area shall be free from sharp edged parts or projections and shall be installed without creating any entrapment situation (see 4.2.7). If loose particulate material is used it shall be installed to a layer thickness of 100 mm more than that determined in Table 4 or by testing to EN 1177. NOTE This is to allow for displacement of loose particulate material through use.	
4.2.8.5.2	Equipment with a free height of fall greater than 600 mm or with forced movement Beneath all playground equipment with a free height of fall of more than 600 mm and/or equipment causing a forced movement on the body of the user (e.g. swings, slides, rocking equipment, cableways, carousels, etc.), there shall be impact attenuating surfacing over the entire impact area. NOTE 1 Specific requirements for equipment causing a forced movement on the body of the user (e.g. swings, slides, rocking equipment etc.) are covered in other parts of EN 1176. The critical fall height of the surfacing shall be equal to, or greater than, the free height of fall of the equipment. Examples for commonly used impact attenuating materials are given in Table 4 with the related maximum free heights of fall, tested in accordance with EN 1177 and measured partly on site and partly in the laboratory with different test conditions. Where the installed surfacing can be verified as being in accordance with Table 4, no additional testing is required.	NC

Unless otherwise agreed in writing, this document is issued by the Company subject to its General Conditions of Service printed overleaf, available on request or accessible at https://www.sgs.com/en/Terms-and-Conditions. Attention is drawn to the limitation of liability, indemnification and jurisdiction issues defined therein. Any holder of this document is advised that information contained hereon reflects the Company's findings at the time of its intervention only and within the limits of Client's instructions, if any. The Company's sole responsibility is to its Client and this document does not exonerate parties to a transaction from exercising all their rights and obligations under the transaction documents. This document cannot be reproduced except in full, without prior written approval of the Company. Any unauthorized alteration, forgery or falsification of the content or appearance of this document is unlawful and offenders may be prosecuted to the fullest extent of the law. Unless otherwise stated the results shown in this test report refer only to the sample(s) tested and such sample(s) are retained for 30 days only.
Attention: To check the authenticity of testing /inspection report & certificate, please contact us at telephone: (86-755) 8307 1443, or email: CN.Doccheck@sgs.com
Building 30 and Building 18, Heimudan Science Park, Tianning District, Changzhou, Jiangsu, China 213017 t (86-519) 8558 7753 www.sgsgroup.com.cn
中国·江苏·常州市天宁区黑牡丹科技园30幢、18幢 邮编: 213017 t (86-519) 8558 7753 sgs.china@sgs.com
Member of the SGS Group (SGS SA)

Clause	Test Method & Test Requirement	Rating

Material[a]	Description	Minimum depth[b]	Maximum free heights of fall
Where the installed surfacing is verified (e.g. sieve test) as being in accordance with this table or carries a test report according to EN 1177, no additional testing is required	mm	mm	mm
Turf/topsoil	—	—	≤ 1 000[d]
Bark	20 to 80 particle size	200	≤ 2 000
		300	≤ 3 000
Woodchip	5 to 30 particle size	200	≤ 2 000
		300	≤ 3 000
Sand or gravel[c]	0,25 to 8 grain size	200	≤ 2 000
		300	≤ 3 000
Other materials and other depths	As tested according to EN 1177		Critical fall height as tested

[a] For further information on specific material properly prepared for use in children's playgrounds see CEN/TR 16598 (Collection of Rationales for EN 1176–1 requirements).

[b] For loose particulate material, add 100 mm to the minimum depth to compensate for displacement (see 4.2.8.5.1).

[c] Sand and gravel shall be well rounded and washed to eliminate most of the silt or clay particles. Washed sand or gravel is considered to be from alluvial (naturally eroded) deposits and free from most silt or clay particles. For gravel this may commonly be described as 'pea shingle'. Uniformity coefficient D60/D10 < 3,0. Grain size can be identified by use of a sieve test, as in EN 933–1 (see Annex G).

[d] See NOTE 2 in 4.2.8.5.2.

The extent of the impact area is given in 4.2.8.2.4.

NOTE 2 Turf as well as having aesthetic appeal also has some useful impact attenuating properties. Experience has shown that, if well maintained, it is normally effective for fall heights up to 1 m and can be used without the need to conduct a test. For fall heights above 1 m, the performance of turf as an impact attenuating surfacing is dependent upon local climatic conditions. Therefore, as there are significant regional variations in climate throughout Europe it is advised that guidelines are given at a national level. Turf/topsoil is not intended to be tested in accordance with EN 1177.

NOTE 3 Impact attenuating materials are tested under specific conditions; therefore the performance of these materials can vary in use (e.g. materials under frozen conditions, rain or extreme heat) – see 6.2 of this standard.

Impact attenuating materials should be adequately maintained. Failure to maintain such surfaces will result in the impact attenuation being significantly reduced.

NOTE 4 Loose fill material specifications in Table 4 are examples that can be accepted without further testing in accordance with EN 1177.

4.2.8.5.3	Equipment with a free height of fall not exceeding 600 mm and without forced movement It is not necessary to test the critical fall height of a surface beneath playground equipment having a free fall height of less than 600 mm and which does not cause forced movement on the body of the user	NA

Unless otherwise agreed in writing, this document is issued by the Company subject to its General Conditions of Service printed overleaf, available on request or accessible at https://www.sgs.com/en/Terms-and-Conditions. Attention is drawn to the limitation of liability, indemnification and jurisdiction issues defined therein. Any holder of this document is advised that information contained hereon reflects the Company's findings at the time of its intervention only and within the limits of Client's instructions, if any. The Company's sole responsibility is to its Client and this document does not exonerate parties to a transaction from exercising all their rights and obligations under the transaction documents. This document cannot be reproduced except in full, without prior written approval of the Company. Any unauthorized alteration, forgery or falsification of the content or appearance of this document is unlawful and offenders may be prosecuted to the fullest extent of the law. Unless otherwise stated the results shown in this test report refer only to the sample(s) tested and such sample(s) are retained for 30 days only.
Attention: To check the authenticity of testing /inspection report & certificate, please contact us at telephone: (86-755) 8307 1443, or email: CN.Doccheck@sgs.com
Building 30 and Building 18, Heimudan Science Park, Tianning District, Changzhou, Jiangsu, China 213017 t (86-519) 8558 7753 www.sgsgroup.com.cn
中国·江苏·常州市天宁区黑牡丹科技园30幢、18幢 邮编: 213017 t (86-519) 8558 7753 sgs.china@sgs.com
Member of the SGS Group (SGS SA)

Clause	Test Method & Test Requirement	Rating
4.2.8.5.4	Adjacent platforms If the free height of fall between adjacent platforms is more than 1 m, the surface of the lower platform shall present the necessary impact attenuating properties.	NA
4.2.8.6	Protection against injuries due to other types of movement The space in, on or around the equipment that can be occupied by the user shall not contain any obstacles that the user is not likely to expect and which could cause injuries if hit by the user. NOTE Examples of such obstacles are shown in Figure 20.	NA
4.2.9	Means of access	P
4.2.9.1	Ladders The spacing of the rungs or steps shall conform to the head entrapment requirements given in 4.2.7.2. Rungs and steps shall be non-rotating and equally spaced. Equal spacing is required only between the rungs. It is not required between the highest rung and the platform or the ground and the first rung. The requirement for equal spacing does not apply to rope ladders. NOTE To assist the safe transfer from the ladder to the platform or its summit, the stiles of the ladder without the rungs or steps can continue vertically from the platform to the top of the barrier. Wooden components shall have positive connections that cannot be undone or shifted. Nails or wood screws shall not be used as the only form of connection. To allow for the foot to rest correctly on the rung or step there shall be an unobstructed space at the rear of the ladder of at least 90 mm from the centre of the rung or tread measured at 90° to the ladder. Rungs and steps shall be horizontal to within ± 3°. Ladders shall have rungs and/or stiles or shall have handrails that conform to the requirements for grip according to 4.2.4.6 or for grasp according to 4.2.4.7.	NA
4.2.9.2	Stairs Stairs with a free height of fall greater than 600 mm shall conform to the requirements of 4.2.4 concerning protection against falling. Guardrails and/or barriers shall be provided from the first step and shall conform to the requirements for grasp (4.2.4.7) or a handrail shall be provided. NOTE 1 This is to ensure that hand support is available for the entire run of the stair. For stairs leading to platforms up to 1 000 mm in height a guardrail may replace the barrier, providing the gap beneath the guardrail is less than 600 mm when measured from the middle of the tread. NOTE 2 For platforms above 1 000 mm, a combination of guardrails and barriers is allowed.	P

Unless otherwise agreed in writing, this document is issued by the Company subject to its General Conditions of Service printed overleaf, available on request or accessible at https://www.sgs.com/en/Terms-and-Conditions. Attention is drawn to the limitation of liability, indemnification and jurisdiction issues defined therein. Any holder of this document is advised that information contained hereon reflects the Company's findings at the time of its intervention only and within the limits of Client's instructions, if any. The Company's sole responsibility is to its Client and this document does not exonerate parties to a transaction from exercising all their rights and obligations under the transaction documents. This document cannot be reproduced except in full, without prior written approval of the Company. Any unauthorized alteration, forgery or falsification of the content or appearance of this document is unlawful and offenders may be prosecuted to the fullest extent of the law. Unless otherwise stated the results shown in this test report refer only to the sample(s) tested and such sample(s) are retained for 30 days only.
Attention: To check the authenticity of testing /inspection report & certificate, please contact us at telephone: (86-755) 8307 1443, or email: CN.Doccheck@sgs.com
Building 30 and Building 18, Heimudan Science Park, Tianning District, Changzhou, Jiangsu, China 213017 t (86-519) 8558 7753 www.sgsgroup.com.cn
中国·江苏·常州市天宁区黑牡丹科技园30幢、18幢 邮编: 213017 t (86-519) 8558 7753 sgs.china@sgs.com
Member of the SGS Group (SGS SA)

Clause	Test Method & Test Requirement	Rating
	NOTE 3 A panel type barrier with a thickness of less than 60 mm is considered in compliance with grasp requirements. The inclination of stairs shall be constant. Openings shall conform to the entrapment requirements given in 4.2.7.2. The treads shall be spaced equally, shall be of uniform construction, and shall be horizontal within ± 3°. To provide adequate space for standing, the minimum projection of tread shall be 140 mm and the minimum depth of tread shall be 110 mm (see Figure 22). Where the overall height of the set of stairs is more than 2 000 mm above ground level, intermediate landings shall be provided at height intervals not exceeding 2 000 mm. Intermediate landings shall be at least as wide as the set of stairs and at least 1 000 mm long.	
4.2.9.3	Ramps Ramps shall be inclined at an angle of up to 38° to the horizontal and shall be of a constant angle. NOTE 1 Surfaces with a greater inclination are not regarded as ramps but can be used as a means of access. Ramps shall conform to the requirements of 4.2.4. For ramps leading to platforms up to 1 m in height a guardrail may replace the barrier, providing the gap beneath the guardrail is less than 600 mm. If guardrails are used, they shall be provided from the beginning of the ramp. Ramps shall be level within ± 3° across their width. To reduce the risk of slipping, ramps expected to be used by all children shall include means to improve the grip of the foot. NOTE 2 This can be achieved by use of suitable foot holds.	P
4.2.9.4	Steep play elements For steep play elements provided on easily accessible parts of equipment the opening in the barrier shall be 500 mm maximum and the free height of fall of the platform shall be 2 000 mm maximum. NOTE This is to help the carer reach up to the user if necessary. Openings leading from a platform with a free height of fall of > 1 000 mm to a steep play element shall have hand supports that comply with grasp requirements.	NA
4.2.9.5	Easily accessible playground equipment Equipment designed to allow users to move quickly and freely onto it is to be considered as easily accessible. It is not the intention of this standard to give a definitive list of the types of possible access and associated requirements, but to provide guidance on the best way to tackle the issue of easy access. The following is an example of the hierarchy of three easy access possibilities:	

Unless otherwise agreed in writing, this document is issued by the Company subject to its General Conditions of Service printed overleaf, available on request or accessible at https://www.sgs.com/en/Terms-and-Conditions. Attention is drawn to the limitation of liability, indemnification and jurisdiction issues defined therein. Any holder of this document is advised that information contained hereon reflects the Company's findings at the time of its intervention only and within the limits of Client's instructions, if any. The Company's sole responsibility is to its Client and this document does not exonerate parties to a transaction from exercising all their rights and obligations under the transaction documents. This document cannot be reproduced except in full, without prior written approval of the Company. Any unauthorized alteration, forgery or falsification of the content or appearance of this document is unlawful and offenders may be prosecuted to the fullest extent of the law. Unless otherwise stated the results shown in this test report refer only to the sample(s) tested and such sample(s) are retained for 30 days only.
Attention: To check the authenticity of testing /inspection report & certificate, please contact us at telephone: (86-755) 8307 1443, or email: CN.Doccheck@sgs.com
Building 30 and Building 18, Heimudan Science Park, Tianning District, Changzhou, Jiangsu, China 213017 t (86-519) 8558 7753 www.sgsgroup.com.cn
中国·江苏·常州市天宁区黑牡丹科技园30幢、18幢 邮编: 213017 t (86-519) 8558 7753 sgs.china@sgs.com

Clause	Test Method & Test Requirement	Rating
	a) Ramps starting from the ground are the easiest means of access to the equipment. b) Stairs are the next easiest means of access to the equipment. c) Ladders are the least easy means of access to equipment in this example. There are many designs which can delay access to the equipment, thus giving more time for carers to intervene as appropriate. Such design features may include, but are not restricted to, movement, height or dimensional requirements e.g. reach distance or step height. NOTE 1 Carers include adults, responsible siblings and others who are looking after the user (see CEN/CLC Guide 14 for more information on carers). NOTE 2 Examples of access restriction by height or dimension might include but are not limited to ramps where the start is more than 600 mm above the ground or ladders where the lowest rung is more than 400 mm above the ground. The figure of 400 mm is a compromise between the need to limit access and the need to provide a safe means of exit by the same route.	
4.2.10	Connections Connections shall be secured such that they cannot come loose of their own accord unless specifically designed to do so. Connections shall be safeguarded so that they cannot be undone without tools.	P
4.2.11	Consumable components Replaceable components should be protected against unauthorized intervention and should require little maintenance. Any lubricants leaking out should not soil the equipment or adversely affect its safe use.	P
4.2.12	Ropes	NA
4.2.12.1	Ropes fixed at one end For suspended ropes between 1 m and 2 m in length, the distance between ropes fixed at one end and fixed equipment shall be not less than 600 mm and the distance between ropes fixed at one end and swinging equipment shall be not less than 900 mm. Ropes fixed at one end shall not be combined with swings in the same bay (see EN 1176-2). For suspended ropes of between 2 m and 4 m in length, the distance between ropes fixed at one end and other parts of equipment shall be not less than 1 m. The rope diameter shall be between 25 mm and 45 mm. NOTE A stiffer rope, depending on its diameter and construction, will make it more difficult to create a loop, thus reducing the risk of strangulation. However, it will still allow good grip.	NA

通标标准技术服务(常州)有限公司 检验检测专用章 Inspection & Testing Services SGS-CSTC Standards Technical Services (Changzhou) Co., Ltd. Hardlines

Unless otherwise agreed in writing, this document is issued by the Company subject to its General Conditions of Service printed overleaf, available on request or accessible at https://www.sgs.com/en/Terms-and-Conditions. Attention is drawn to the limitation of liability, indemnification and jurisdiction issues defined therein. Any holder of this document is advised that information contained hereon reflects the Company's findings at the time of its intervention only and within the limits of Client's instructions, if any. The Company's sole responsibility is to its Client and this document does not exonerate parties to a transaction from exercising all their rights and obligations under the transaction documents. This document cannot be reproduced except in full, without prior written approval of the Company. Any unauthorized alteration, forgery or falsification of the content or appearance of this document is unlawful and offenders may be prosecuted to the fullest extent of the law. Unless otherwise stated the results shown in this test report refer only to the sample(s) tested and such sample(s) are retained for 30 days only.
Attention: To check the authenticity of testing /inspection report & certificate, please contact us at telephone: (86-755) 8307 1443, or email: CN.Doccheck@sgs.com
Building 30 and Building 18, Heimudan Science Park, Tianning District, Changzhou, Jiangsu, China 213017 t (86-519) 8558 7753 www.sgsgroup.com.cn
中国·江苏·常州市天宁区黑牡丹科技园30幢、18幢 邮编: 213017 t (86-519) 8558 7753 sgs.china@sgs.com
Member of the SGS Group (SGS SA)

Clause	Test Method & Test Requirement	Rating
4.2.12.2	Ropes fixed at both ends (climbing ropes) For a rope fixed at both ends, typically for climbing up and not part of a larger net structure, it shall not be possible to make a loop in the rope that is wide enough to let probe C pass through (see Figure D.1) nor probe E (see Figure D.1) pass through. NOTE 1 This requirement is intended to remove the risk of strangulation. The rope diameter shall meet the grip requirements given in 4.2.4.6. NOTE 2 Ropes with sufficient roughness allow for a good grip. This can be achieved, for example, by using outer strands with a diameter of at least 6 mm. When a rope fixed at both ends is used in conjunction with another element, care shall be taken not to create entrapment situations, see 4.2.7.2.	NA
4.2.12.3	Wire ropes Wire ropes shall be unstressed and shall be made from galvanized or corrosion-resistant wire. Ferrules shall conform to EN 13411-3 and the rope end shall coincide with the edge of the grip. Wire rope grips shall be utilized in accordance with EN 13411-5. If accessible and the thread ends protrude more than 8 mm, they shall only be used outside the minimum space or shall be covered by suitable means. The ends of the turnbuckles shall be closed (see Figure 23) and shall be made from corrosion-resistant material. It shall not be possible to undo turnbuckles without a tool.	NA
4.2.12.4	Sheathed wire ropes When sheathed wire ropes are used for climbing ropes, climbing nets, hanging ropes and the like, each strand shall be sheathed with yarn made from synthetic or natural fibres. The sheath shall not contain monofilament. NOTE The wires inside the strands make it more difficult for the ropes to be intentionally damaged and thus reduce any hazards.	NA
4.2.12.5	Fibre ropes (textile type) Fibre ropes shall either: a) conform to EN ISO 9554 or EN ISO 2307; or b) the manufacturer shall supply a work certificate stating the material used and the safe working load. In the case of climbing ropes, climbing nets, hanging ropes and the like, the strands shall have a soft and non-slip covering, e.g. hemp or equivalent material. Monofilament plastic ropes or ropes made from similar materials shall not be used.	NA

Unless otherwise agreed in writing, this document is issued by the Company subject to its General Conditions of Service printed overleaf, available on request or accessible at https://www.sgs.com/en/Terms-and-Conditions. Attention is drawn to the limitation of liability, indemnification and jurisdiction issues defined therein. Any holder of this document is advised that information contained hereon reflects the Company's findings at the time of its intervention only and within the limits of Client's instructions, if any. The Company's sole responsibility is to its Client and this document does not exonerate parties to a transaction from exercising all their rights and obligations under the transaction documents. This document cannot be reproduced except in full, without prior written approval of the Company. Any unauthorized alteration, forgery or falsification of the content or appearance of this document is unlawful and offenders may be prosecuted to the fullest extent of the law. Unless otherwise stated the results shown in this test report refer only to the sample(s) tested and such sample(s) are retained for 30 days only.
Attention: To check the authenticity of testing /inspection report & certificate, please contact us at telephone: (86-755) 8307 1443, or email: CN.Doccheck@sgs.com
Building 30 and Building 18, Heimudan Science Park, Tianning District, Changzhou, Jiangsu, China 213017 t (86-519) 8558 7753 www.sgsgroup.com.cn
中国·江苏·常州市天宁区黑牡丹科技园30幢、18幢 邮编: 213017 t (86-519) 8558 7753 sgs.china@sgs.com
Member of the SGS Group (SGS SA)

Clause	Test Method & Test Requirement	Rating
4.2.13	Chains Chains for playground equipment shall conform to the dimensional requirements in EN 818-2:1996+A1:2008, Table 2 or EN 818-3:1999+A1:2008, Table 2 as a minimum and, when tested in accordance with D.5, shall conform to one of the following requirements: a) the 8,6 mm rod (see Figure D.13) shall not pass through the minimum cross-section of the chain opening, NOTE When "8-mm-short-link-chains" wear, the openings can increase. If the opening on a worn chain is greater than 8,6 mm, a risk assessment can be carried out to confirm whether replacement is necessary. or where a connection is made b) if the 8,6 mm finger rod passes through the opening, the 12 mm rod (see Figure D.13) shall also pass through the opening.	NA
4.2.14	Foundations The foundations shall be designed such that they do not present a hazard (tripping, impact). In loose fill surfacing (e.g. sand), foundations shall be installed or laid in accordance with one of the following: a) so that pedestals, footings and fixing elements on the equipment are at least 400 mm below the playing surface or; NOTE 1 Post shoes are not considered foundations. b) if the tops of the foundations are as shown in Figure 24 at least 200 mm below the surfacing; or c) so that they are covered by items of equipment or equipment parts (e.g. central foundation of a roundabout). Any parts that protrude from the foundations such as the ends of screws shall be at least 400 mm below the playing surface unless they are effectively covered and finished as described in 4.2.5. Additional measures should be taken for equipment in which the stability depends on only one cross-section. Foundations of one post equipment shall be accessible for periodic inspection. The choice and installation of impact attenuating surfacing should be carefully planned in order to allow for inspections and if access to the foundations is required. For example, for synthetic surfacing, this may require the surfacing to be cut-back and re-laid. NOTE 2 When components are embedded in concrete there is a risk of corrosion or rotting. The high rate of corrosion or rotting under dynamic loading endangers the stability of the anchorage of units in which the stability depends on only one cross-section, or in which the stability is provided by two-legged members or rows of members. NOTE The basic level mark given by the manufacturer on the equipment shows the level of the playing surface. It is advised to maintain this basic level.	NA
4.2.15	Heavy suspended rigid beams Rigid suspended beams are deemed heavy when they have a mass of 25 kg or more.	NA

通标标准技术服务(常州)有限公司 检验检测专用章 Inspection & Testing Services SGS-CSTC Standards Technical Services (Changzhou) Co., Ltd. Hardlines

Unless otherwise agreed in writing, this document is issued by the Company subject to its General Conditions of Service printed overleaf, available on request or accessible at https://www.sgs.com/en/Terms-and-Conditions. Attention is drawn to the limitation of liability, indemnification and jurisdiction issues defined therein. Any holder of this document is advised that information contained hereon reflects the Company's findings at the time of its intervention only and within the limits of Client's instructions, if any. The Company's sole responsibility is to its Client and this document does not exonerate parties to a transaction from exercising all their rights and obligations under the transaction documents. This document cannot be reproduced except in full, without prior written approval of the Company. Any unauthorized alteration, forgery or falsification of the content or appearance of this document is unlawful and offenders may be prosecuted to the fullest extent of the law. Unless otherwise stated the results shown in this test report refer only to the sample(s) tested and such sample(s) are retained for 30 days only.
Attention: To check the authenticity of testing /inspection report & certificate, please contact us at telephone: (86-755) 8307 1443, or email: CN.Doccheck@sgs.com
Building 30 and Building 18, Heimudan Science Park, Tianning District, Changzhou, Jiangsu, China 213017 t (86-519) 8558 7753 www.sgsgroup.com.cn
中国·江苏·常州市天宁区黑牡丹科技园30幢、18幢 邮编: 213017 t (86-519) 8558 7753 sgs.china@sgs.com
Member of the SGS Group (SGS SA)

Clause	Test Method & Test Requirement	Rating
	There shall be a ground clearance of at least 400 mm underneath heavy suspended rigid beams, (see Figure 25). The ground clearance is measured as the distance between the lowest point of the lower edge of the heavy suspended rigid beam and the surface below. The heavy suspended rigid beam shall be so constructed that all changes in the profile of the beam shall have a radius of at least 50 mm. The range of movement (a in Figure 25) shall not exceed 300 mm and shall not go beyond the support posts. The distance between the support posts and the heavy suspended rigid beam (b) shall not be less than 230 mm throughout its full range of movement.	
4.2.16	Bouncing facilities	P
4.2.16.1	General A bouncing facility with a suspension bed smaller than 1,44 m2 is considered as a small bouncing facility. NOTE Bouncing facilities with a suspension bed ≥ 1,44 m2 are considered as large bouncing facilities. The extent of the falling space of a suspension bed of a small bouncing facility shall be 1 500 mm. The extent of the falling space of a suspension bed of a large bouncing facility shall be 2 000 mm. When a suspension bed gives a user a predetermined jumping direction to outside of the suspension bed, the extent of the impact area to that direction shall be at least 3 000 mm. Unprotected edges within the falling space that the user can hit shall be rounded with at least 20 mm radius. The maximum allowed height of any point of the suspension bed is 600 mm measured from the surrounding ground or platform of the playground equipment 1 500 mm away from that specific point (see Figure 26). In case of failure of the suspension bed or its supports (spring, rubber band etc.) the user shall not fall more than 600 mm unless the impact area below has an adequate level of impact attenuation equivalent to the free height of fall of the suspension bed. There shall be no dangerous obstacles under or around the suspension bed, onto which a user could fall or otherwise be injured. For a bouncing facility the extent of the free space shall be 1 500 mm measured horizontally from any point at the perimeter and 3 500 mm above the suspension bed. During a physical weight test according to 4.2.2, the minimum ground clearance shall be ≥ 100 mm. NOTE 1 This is to prevent unintended contact with the ground while jumping. During a dynamic physical test according to D.6 the rebound effect of the bouncing facility shall not be more than 700 mm above the suspension bed.	P

Unless otherwise agreed in writing, this document is issued by the Company subject to its General Conditions of Service printed overleaf, available on request or accessible at https://www.sgs.com/en/Terms-and-Conditions. Attention is drawn to the limitation of liability, indemnification and jurisdiction issues defined therein. Any holder of this document is advised that information contained hereon reflects the Company's findings at the time of its intervention only and within the limits of Client's instructions, if any. The Company's sole responsibility is to its Client and this document does not exonerate parties to a transaction from exercising all their rights and obligations under the transaction documents. This document cannot be reproduced except in full, without prior written approval of the Company. Any unauthorized alteration, forgery or falsification of the content or appearance of this document is unlawful and offenders may be prosecuted to the fullest extent of the law. Unless otherwise stated the results shown in this test report refer only to the sample(s) tested and such sample(s) are retained for 30 days only.
Attention: To check the authenticity of testing /inspection report & certificate, please contact us at telephone: (86-755) 8307 1443, or email: CN.Doccheck@sgs.com
Building 30 and Building 18, Heimudan Science Park, Tianning District, Changzhou, Jiangsu, China 213017 t (86-519) 8558 7753 www.sgsgroup.com.cn
中国·江苏·常州市天宁区黑牡丹科技园30幢、18幢 邮编: 213017 t (86-519) 8558 7753 sgs.china@sgs.com
Member of the SGS Group (SGS SA)

Clause	Test Method & Test Requirement	Rating
	NOTE 2 This is to prevent the user bouncing too high and reaching a falling height greater than the adequate level of impact attenuation of the adjacent surface. Consideration shall be given to the design of the equipment and to the layout of the surrounding area in order to avoid jumping from surrounding installations (other than the enclosure) onto the suspension bed. Suspension beds made out of textile shall maintain 80 % of their initial tensile strength according to EN ISO 13934-1 after exposure to light and UV, according to EN ISO 4892-3, for a minimum period of 400 h. Large bouncing facilities shall have a sufficient ground clearance under the suspension bed. During the physical test according to 4.2.2, the clearance below the suspension bed shall remain greater than 230 mm. If this cannot be achieved, access under the suspension bed shall be prevented in a way that the test probe E cannot pass any opening leading under the suspension bed. NOTE 3 This is to protect non-users from getting squeezed between the ground and the suspension bed. Openings in the suspension bed shall not be greater than 30 mm measured in the smallest direction. Under a static weight of 69,5 kg applied to the middle of the suspension bed, any opening shall not allow passage of the test probe E. Access to the space under the suspension bed shall be provided for cleaning.	
4.2.16.2	Enclosures of bouncing facilities Where enclosures are provided, a risk assessment shall be made before allowing an enclosure for bouncing facilities in unsupervised settings. An enclosure, where climbing is not encouraged and with a minimum height of 1 800 mm, may be introduced to reduce the falling space or to prevent users from falling from the suspension bed. Sections of the enclosure above the height of 2 400 mm shall be unclimbable. The enclosure shall withstand a horizontal force of (800 ± 50) N applied to the centre of each enclosure section. Net yarns shall have a minimum diameter of 2 mm to reduce the risk of cutting fingers of users.	P
6	Information to be provided by the manufacturer/supplier	
6.1	Information to be provided by the manufacturer of playground equipment	NC
6.2	Information to be provided by the manufacturer or supplier of impact attenuating surface	NC
7	Marking	NC

通标标准技术服务(常州)有限公司 检验检测专用章 Inspection & Testing Services SGS-CSTC Standards Technical Services (Changzhou) Co., Ltd. Hardlines

Unless otherwise agreed in writing, this document is issued by the Company subject to its General Conditions of Service printed overleaf, available on request or accessible at https://www.sgs.com/en/Terms-and-Conditions. Attention is drawn to the limitation of liability, indemnification and jurisdiction issues defined therein. Any holder of this document is advised that information contained hereon reflects the Company's findings at the time of its intervention only and within the limits of Client's instructions, if any. The Company's sole responsibility is to its Client and this document does not exonerate parties to a transaction from exercising all their rights and obligations under the transaction documents. This document cannot be reproduced except in full, without prior written approval of the Company. Any unauthorized alteration, forgery or falsification of the content or appearance of this document is unlawful and offenders may be prosecuted to the fullest extent of the law. Unless otherwise stated the results shown in this test report refer only to the sample(s) tested and such sample(s) are retained for 30 days only.
Attention: To check the authenticity of testing /inspection report & certificate, please contact us at telephone: (86-755) 8307 1443, or email: CN.Doccheck@sgs.com
Building 30 and Building 18, Heimudan Science Park, Tianning District, Changzhou, Jiangsu, China 213017 t (86-519) 8558 7753 www.sgsgroup.com.cn
中国·江苏·常州市天宁区黑牡丹科技园30幢、18幢 邮编: 213017 t (86-519) 8558 7753 sgs.china@sgs.com
Member of the SGS Group (SGS SA)

2. AS 4685.3-2021 Playground equipment and surfacing Part 3: Additional specific safety requirements and test methods for slides (EN 1176-3:2017, MOD)

Scope:

1. This European Standard specifies additional safety requirements for slides intended for permanent installation for use by children. The aim is to provide protection to the user against possible hazards during use. Where the main play function is not sliding, the relevant requirements in this part of EN 1176 may be used, as appropriate.
2. This document is not applicable to waterslides, rollerways or slide installations where auxiliary equipment such as mats or sledges are used. This document is not applicable to inclined surfaces that do not contain and guide the user, e.g. banister rails (inclined parallel bars).

Sample size/weight::	5000 x 3750 x 4000 mm / 375 kg (claimed by client)	Total number of users:	10
Age range:	3-14	Number of tested samples:	1

Clause	Test Method & Test Requirement	Rating
4	Safety requirements	
4.1	General Slides shall conform to EN 1176-1 unless otherwise specified in this part of EN 1176.	P
4.2	Access Access to the starting section shall be by means of an access ladder, stairs, climbing section or device. In the case of embankment slides, access to the starting section may be gained directly from the mound. For free-standing slides, the maximum vertical height that the first stairs can reach without a change in direction or offset, by a minimum width of the means of access, shall be 2 500 mm. Where the starting section of a slide is easily accessible the free height of fall (h) shall be 1 000 mm maximum unless guarding is provided (see 4.3.2). For all attachment slides with a fall height greater than 1 000 mm, a rail or crossbar across the access opening shall be provided (see Figure 1a)). The rail or crossbar shall be positioned between the platform guard rail or barrier and the start of the sliding section. The height of the rail or crossbar shall be between 600 mm and 900 mm above the starting section. For attachment slides with a starting section or barrier beyond the edge of the platform, the area of the starting section between the rail or crossbar and the platform shall comply with the same requirements as platforms in EN 1176-1. NOTE Such requirements include the height of guard rail or barrier.	P
4.3	Starting section	

Unless otherwise agreed in writing, this document is issued by the Company subject to its General Conditions of Service printed overleaf, available on request or accessible at https://www.sgs.com/en/Terms-and-Conditions. Attention is drawn to the limitation of liability, indemnification and jurisdiction issues defined therein. Any holder of this document is advised that information contained hereon reflects the Company's findings at the time of its intervention only and within the limits of Client's instructions, if any. The Company's sole responsibility is to its Client and this document does not exonerate parties to a transaction from exercising all their rights and obligations under the transaction documents. This document cannot be reproduced except in full, without prior written approval of the Company. Any unauthorized alteration, forgery or falsification of the content or appearance of this document is unlawful and offenders may be prosecuted to the fullest extent of the law. Unless otherwise stated the results shown in this test report refer only to the sample(s) tested and such sample(s) are retained for 30 days only.
Attention: To check the authenticity of testing /inspection report & certificate, please contact us at telephone: (86-755) 8307 1443, or email: CN.Doccheck@sgs.com
Building 30 and Building 18, Heimudan Science Park, Tianning District, Changzhou, Jiangsu, China 213017 t (86-519) 8558 7753 www.sgsgroup.com.cn
中国·江苏·常州市天宁区黑牡丹科技园30幢、18幢 邮编: 213017 t (86-519) 8558 7753 sgs.china@sgs.com
Member of the SGS Group (SGS SA)

Clause	Test Method & Test Requirement	Rating
4.3.1	Length and angle Each slide shall have a starting section of at least 350 mm length. The starting section shall have a downward slope tolerance from 0° to 5° in the direction of the sliding section, the measurement being made at the centreline of the starting section. For attachment slides the platform may be used as a starting section.	P
4.3.2	Guarding section The starting section shall have a guarding section conforming to the barrier requirements of EN 1176-1 when one of the following applies: — the length of the starting section is more than 400 mm; — the starting section is easily accessible and has a free height of fall of more than 1 000 mm; — the free height of fall of the starting section is more than 2 000 mm. The guarding section shall either be a continuation of the lateral protection or be outside the plane of the lateral protection. When the guarding section is separate from or outside the plane of the lateral protection, the maximum vertical or horizontal offset shall be less than 89 mm. For attachment slides, the opening in the barrier shall be the same as the width of the starting section or guarding section. For attachment slides where all or part of the starting section is beyond the platform edge, the guarding section shall have a height of at least 500 mm at some point (see Figure 1a)). For attachment slides where the platform is used as the entire starting section, the requirements for protection against falling in EN 1176-1:2017, 4.2.4, apply. For free-standing slides, the guarding section shall have a height of at least that required for platforms at one point (see Figure 1b)).	P
4.3.3	Width The width of the starting section shall be equal to that of the sliding section. The starting section shall be designed so that it is aligned with the direction of the initial sliding movement. If the starting section is a platform or the extension of a platform the starting section may be greater in width than the sliding section.	P
4.3.4	Lateral protection (sides) The lateral protection of the starting section shall be a continuous unbroken extension of the lateral protection of the sliding section. The construction of the lateral protection may be from multiple components. Any joints should be free from entrapment and not present a hazard to users. Any variations in the angle of declination of the top of the lateral protection in the sliding direction shall be made with a radius of at least 50 mm at some point.	P

Unless otherwise agreed in writing, this document is issued by the Company subject to its General Conditions of Service printed overleaf, available on request or accessible at https://www.sgs.com/en/Terms-and-Conditions. Attention is drawn to the limitation of liability, indemnification and jurisdiction issues defined therein. Any holder of this document is advised that information contained hereon reflects the Company's findings at the time of its intervention only and within the limits of Client's instructions, if any. The Company's sole responsibility is to its Client and this document does not exonerate parties to a transaction from exercising all their rights and obligations under the transaction documents. This document cannot be reproduced except in full, without prior written approval of the Company. Any unauthorized alteration, forgery or falsification of the content or appearance of this document is unlawful and offenders may be prosecuted to the fullest extent of the law. Unless otherwise stated the results shown in this test report refer only to the sample(s) tested and such sample(s) are retained for 30 days only.
Attention: To check the authenticity of testing /inspection report & certificate, please contact us at telephone: (86-755) 8307 1443, or email: CN.Doccheck@sgs.com
Building 30 and Building 18, Heimudan Science Park, Tianning District, Changzhou, Jiangsu, China 213017 t (86-519) 8558 7753 www.sgsgroup.com.cn
中国·江苏·常州市天宁区黑牡丹科技园30幢、18幢 邮编: 213017 t (86-519) 8558 7753 sgs.china@sgs.com
Member of the SGS Group (SGS SA)

Clause	Test Method & Test Requirement	Rating
4.4	Sliding section	
4.4.1	Length and angle The length of the initial straight sliding section shall not exceed 7 000 mm. The length of the second and subsequent straight sliding sections after a bend shall not exceed 5 000 mm. NOTE 1 Background information and rationale regarding limiting straight sliding sections are given in informative Annex B. The angle of declination to the horizontal of the sliding section shall not exceed 60° at any point and shall not exceed an average of 40°. The declination of the sliding section shall be measured from the centreline. If the changes in angle of declination of slides are greater than 15°, other than for the transitional part between the starting section and the sliding section, the angle shall have a radius as follows: a) for the initial 2 000 mm change in height, at least 450 mm; and b) for the remainder of the slide, at least 1 000 mm. NOTE 2 This to help prevent the user from becoming involuntarily airborne.	P
4.4.2	Width When measured in accordance with Figure 3 and Figure 5b) (for flat bed slides) open and straight, non-tunnel slides with sliding sections exceeding 1 500 mm in length shall have a width (w) of the sliding section of either: a) less than 700 mm; or b) more than 950 mm. Each track of a multi-track slide shall have a width of less than 700 mm. When measured in accordance with Figure 3, helical or curved slides (see Figure 4 for examples) shall have a width (w) of the sliding section of less than 700 mm.	P
4.4.3	Sides and profile of the slide The sliding section shall have solid lateral protection of heights (p) (see Figure 5a) and Figure 5b)) in accordance with Table 1, when measured perpendicular to the sliding section surface. In the case of flat-sided slides, the sides shall not tip out from the vertical by more than 30° (see Figure 5b)). In the case of curved profile sided slides, the profile of the sliding section shall be designed in such a way that the short arm of the template (see Figure 5c)) remains horizontal when placed with the long arm perpendicular to the sliding surface at the highest internal point of the inner face of the side (see Figures 5d)) and Figure 5e)). The sides shall be perpendicular to the sliding surface or curved or angled at an obtuse angle to the sliding surface. The edges of the sides shall be rounded with a radius of at least 3 mm or provided with a means for protection from injury to the user.	P

通标标准技术服务(常州)有限公司 检验检测专用章 Inspection & Testing Services SGS-CSTC Standards Technical Services (Changzhou) Co., Ltd.

Unless otherwise agreed in writing, this document is issued by the Company subject to its General Conditions of Service printed overleaf, available on request or accessible at https://www.sgs.com/en/Terms-and-Conditions. Attention is drawn to the limitation of liability, indemnification and jurisdiction issues defined therein. Any holder of this document is advised that information contained hereon reflects the Company's findings at the time of its intervention only and within the limits of Client's instructions, if any. The Company's sole responsibility is to its Client and this document does not exonerate parties to a transaction from exercising all their rights and obligations under the transaction documents. This document cannot be reproduced except in full, without prior written approval of the Company. Any unauthorized alteration, forgery or falsification of the content or appearance of this document is unlawful and offenders may be prosecuted to the fullest extent of the law. Unless otherwise stated the results shown in this test report refer only to the sample(s) tested and such sample(s) are retained for 30 days only.
Attention: To check the authenticity of testing /inspection report & certificate, please contact us at telephone: (86-755) 8307 1443, or email: CN.Doccheck@sgs.com
Building 30 and Building 18, Heimudan Science Park, Tianning District, Changzhou, Jiangsu, China 213017 t (86-519) 8558 7753 www.sgsgroup.com.cn
中国·江苏·常州市天宁区黑牡丹科技园30幢、18幢 邮编: 213017 t (86-519) 8558 7753 sgs.china@sgs.com
Member of the SGS Group (SGS SA)

Clause	Test Method & Test Requirement	Rating
	In the case of multi-track slides, the track divider shall have a minimum height of 100 mm and shall be rounded with a radius of at least 3 mm. Track dividers shall be provided for the full length of the sliding section as a minimum.	
4.5	Run-out section All slides shall include a run-out section, either Type 1, where the run-out section is short with a long impact area, or Type 2, where the run-out section is long with a short impact area. The declination of the run-out section shall be 10° maximum (for Type 1) or 5° maximum (for Type 2) (see Figure 2). The minimum length of the run-out section shall be in accordance with Table 2. The height (H) of the end of the run-out section (see Figures 6 and 7) above the ground shall be as given in Table 2. It can be dangerous if users stop on the sliding section. Slides should be designed to prevent the user stopping unintentionally before reaching the run-out section. The end of type 1 slide run-outs shall turn down into the ground with a radius of at least 50 mm or reverse at an angle of at least 100° in accordance with Figures 6 and 7.	P
4.6	Surface of the slide The design of slides and accessible structures around them shall be such that no part of clothes can become trapped (see EN 1176-1:2017, D.3). The surface of the slide length and of the lateral protection (sides) should be manufactured in such a way as to obviate any alterations likely to cause injury after exposure to weathering or other stresses arising during use. If the slide surface is constructed from more than one piece of material it should be fabricated so as to eliminate gaps at the joints so that they inhibit the introduction of sharp objects such as razor blades and splinters. The preferred method of protecting against this problem is by manufacturing one piece slide surfaces.	P
4.7	Free space The free space starts at the end of the starting section and finishes at the end of the run-out section (see Figure 8). Certain slide features, e.g. rail or crossbar, hoods or similar, may be present in the free space as they provide additional safety. If present, any such features shall conform to the relevant requirements in EN 1176-1, e.g. entrapment. Central supporting posts on spiral slides may be used in the free space. For open spiral slides, the height of the free space shall be 1 000 mm minimum (see EN 1176-1:2017, 4.2.8.2.3). In the case of multi-track slides, the free spaces may overlap.	P
4.8	Impact area Different to the requirements given in EN 1176-1, the impact area shall be provided to a distance of at least 1 000 mm from the outer edge of the run-out	NC

Unless otherwise agreed in writing, this document is issued by the Company subject to its General Conditions of Service printed overleaf, available on request or accessible at https://www.sgs.com/en/Terms-and-Conditions. Attention is drawn to the limitation of liability, indemnification and jurisdiction issues defined therein. Any holder of this document is advised that information contained hereon reflects the Company's findings at the time of its intervention only and within the limits of Client's instructions, if any. The Company's sole responsibility is to its Client and this document does not exonerate parties to a transaction from exercising all their rights and obligations under the transaction documents. This document cannot be reproduced except in full, without prior written approval of the Company. Any unauthorized alteration, forgery or falsification of the content or appearance of this document is unlawful and offenders may be prosecuted to the fullest extent of the law. Unless otherwise stated the results shown in this test report refer only to the sample(s) tested and such sample(s) are retained for 30 days only.
Attention: To check the authenticity of testing /inspection report & certificate, please contact us at telephone: (86-755) 8307 1443, or email: CN.Doccheck@sgs.com
Building 30 and Building 18, Heimudan Science Park, Tianning District, Changzhou, Jiangsu, China 213017 t (86-519) 8558 7753 www.sgsgroup.com.cn
中国·江苏·常州市天宁区黑牡丹科技园30幢、18幢 邮编: 213017 t (86-519) 8558 7753 sgs.china@sgs.com
Member of the SGS Group (SGS SA)

Clause	Test Method & Test Requirement	Rating
	section of the slide. End corners can be rounded off with a radius of maximum 1 000 mm (see Figure 9). The impact area for type 1 and a sliding section less than 1 500 mm shall be provided to a distance of at least 1 500 mm beyond the required run-out section. If the slide section is more than 1 500 mm, the impact area shall be provided to a distance of at least 2 000 mm beyond the required run-out section and 1 000 mm beyond the end of the required run-out section for type 2 (see Figure 9). The surface of the impact area around the run-out section shall have an adequate level of impact attenuation at least equivalent to a free height of fall of 1 000 mm. The impact area shall be provided to a distance of at least 1 000 mm around the run-out section.	
4.9	Tunnel and mixed tunnel slides	
4.9.1	Clearance Enclosed sections of tunnel slides shall have a minimum internal height of 750 mm, when measured perpendicular to the sliding surface, and a minimum internal width of 750 mm.	NA
4.9.2	Position Tunnel sections shall start at least at the end of the starting section and shall not extend into the run-out section. Tunnel sections shall be continuous over their whole length.	NA
6	Marking Slides shall be marked in accordance with EN 1176-1:2017, Clause 7. Marking shall be positioned on the slide in a location that will be visible when erected on site.	NC

通标标准技术服务(常州)有限公司 检验检测专用章 Inspection & Testing Services SGS-CSTC Standards Technical Services (Changzhou) Co., Ltd.

Unless otherwise agreed in writing, this document is issued by the Company subject to its General Conditions of Service printed overleaf, available on request or accessible at https://www.sgs.com/en/Terms-and-Conditions. Attention is drawn to the limitation of liability, indemnification and jurisdiction issues defined therein. Any holder of this document is advised that information contained hereon reflects the Company's findings at the time of its intervention only and within the limits of Client's instructions, if any. The Company's sole responsibility is to its Client and this document does not exonerate parties to a transaction from exercising all their rights and obligations under the transaction documents. This document cannot be reproduced except in full, without prior written approval of the Company. Any unauthorized alteration, forgery or falsification of the content or appearance of this document is unlawful and offenders may be prosecuted to the fullest extent of the law. Unless otherwise stated the results shown in this test report refer only to the sample(s) tested and such sample(s) are retained for 30 days only.
Attention: To check the authenticity of testing /inspection report & certificate, please contact us at telephone: (86-755) 8307 1443, or email: CN.Doccheck@sgs.com
Building 30 and Building 18, Heimudan Science Park, Tianning District, Changzhou, Jiangsu, China 213017 t (86-519) 8558 7753 www.sgsgroup.com.cn
中国·江苏·常州市天宁区黑牡丹科技园30幢、18幢 邮编: 213017 t (86-519) 8558 7753 sgs.china@sgs.com
Member of the SGS Group (SGS SA)

3. AS 3533.4.2-2013 Amusement rides and devices Part 4.2: Specific requirements- Contained play facilities

Scope:

1. This Standard sets out the minimum safety requirements for the design, development, installation, inspection, maintenance, supervision levels and operation of contained play facilities
2. This Standard does not apply to sites and equipment intended for use in formal sport and therapy.
3. This Standard does not apply to licensed childcare facilities.

Sample size/weight::	5000 x 3750 x 4000 mm / 375 kg (claimed by client)	Total number of users:	10
Age range:	3-14	Number of tested samples:	1

Clause	Test Method & Test Requirement	Rating
Section 3	Design	
3.2	SAFETY REQUIREMENTS	P
3.2.1	General All structural features of the play structure should be designed to minimize injury, in particular from impact and entrapment. Equipment shall be designed to ensure that adults are able to gain access to assist children within the equipment. Enclosed parts of the equipment such as tunnels and playhouses, with an internal distance greater than 2 m from an entry point shall have at least two access openings that are independent of one another. These openings shall not be capable of being locked and shall be accessible without the need for additional aids (e.g. a ladder that is not an integral part of the equipment). These access openings shall have no dimension less than 500 mm. Due to the risk of fire, these two openings shall allow the user to leave the equipment by different routes. Solid walls over 1200 mm high should be kept to a minimum throughout the facility as they will impede the clear vision lines needed for parental supervision. Floor coverings outside of food areas should be non-slip dry surfacing, such as carpet.	P
3.2.3	Facility entry and exit The facility shall have a system in place to control entry and exit, such as a child-resistant fence and gate. The entry and exit system should address the possibility of situations such as patrons exiting either accidentally without their carer or being taken from the facility by an unauthorized person. NOTE: A method of achieving this is by using an identification system matching patrons to acarer, so the only person with whom they can exit the facility is the appropriate carer while monitoring all emergency egress points.	

Unless otherwise agreed in writing, this document is issued by the Company subject to its General Conditions of Service printed overleaf, available on request or accessible at https://www.sgs.com/en/Terms-and-Conditions. Attention is drawn to the limitation of liability, indemnification and jurisdiction issues defined therein. Any holder of this document is advised that information contained hereon reflects the Company's findings at the time of its intervention only and within the limits of Client's instructions, if any. The Company's sole responsibility is to its Client and this document does not exonerate parties to a transaction from exercising all their rights and obligations under the transaction documents. This document cannot be reproduced except in full, without prior written approval of the Company. Any unauthorized alteration, forgery or falsification of the content or appearance of this document is unlawful and offenders may be prosecuted to the fullest extent of the law. Unless otherwise stated the results shown in this test report refer only to the sample(s) tested and such sample(s) are retained for 30 days only.
Attention: To check the authenticity of testing /inspection report & certificate, please contact us at telephone: (86-755) 8307 1443, or email: CN.Doccheck@sgs.com
Building 30 and Building 18, Heimudan Science Park, Tianning District, Changzhou, Jiangsu, China 213017 t (86-519) 8558 7753 www.sgsgroup.com.cn
中国·江苏·常州市天宁区黑牡丹科技园30幢、18幢 邮编: 213017 t (86-519) 8558 7753 sgs.china@sgs.com
Member of the SGS Group (SGS SA)

Clause	Test Method & Test Requirement	Rating
3.2.4	Structural integrity	P
3.2.4.1	Assessment Structural integrity, including stability, of the equipment shall be assessed by an appropriately qualified competent person using one of the following: (a) Calculation, carried out in accordance with Appendices A and B. (b) Physical testing, in accordance with Appendix C. (c) A combination of Items (a) and (b). For equipment where the specific calculations or tests in these Appendices are not appropriate, the structural integrity shall be assessed to be at least equivalent. For a family of products, the structural integrity shall be proven for the worse case of the intended combinations.	See Below
3.2.4.2	Calculations When calculations are carried out in accordance with Appendix B, no limit states shall be exceeded at combinations of loads as given in Paragraph B2.	P Loaded: 594 kg
3.2.4.3	Testing When tested in accordance with Appendix C, the equipment shall show no cracks, damage, or permanent deformation and no loosened connections. Each structure shall resist both permanent and variable loads acting on the equipment and parts of the equipment in accordance with Appendix C. Structural parts shall resist the worst case loading condition.	P
3.2.5	Free height of fall In toddler areas, the free height of fall shall not exceed 1.5 m. In all other areas, the free height of fall shall not exceed 3 m. Unless stated otherwise in this Standard for a particular application, the free height of fall shall be measured as given in Table 3.1. In determining the free height of fall, the possible movements of the equipment and of the patron shall be taken into account. In general, this means that the maximum distance shall be taken.	P
3.2.6	Free space Free space applies to equipment where there is forced movement. Free space may be represented as a series of cylindrical spaces (see Figure 3.2) along the forced path of the user. For sitting/standing equipment the cylinder will originate from and be perpendicular to the bearing surface. For equipment that requires hand support only the cylinder will be plumb relative to the hand support. The cylindrical space is shown in Figure 3.3, and its dimensions shall be as set out in Table 3.2. In determining the free space, the possible movements of the equipment and the user shall be taken into account. There shall be no objects or surfaces in the free space except where a suitable enclosure, impact attenuating padding system, barrier or restraint is in place. This ensures that a patron is prevented from contacting objects likely	P

通标标准技术服务(常州)有限公司 检验检测专用章 Inspection & Testing Services SGS-CSTC Standards Technical Services (Changzhou) Co., Ltd.
SGS-CSTC Standards Technical Services (Changzhou) Co.,Ltd. Hardlines

Unless otherwise agreed in writing, this document is issued by the Company subject to its General Conditions of Service printed overleaf, available on request or accessible at https://www.sgs.com/en/Terms-and-Conditions. Attention is drawn to the limitation of liability, indemnification and jurisdiction issues defined therein. Any holder of this document is advised that information contained hereon reflects the Company's findings at the time of its intervention only and within the limits of Client's instructions, if any. The Company's sole responsibility is to its Client and this document does not exonerate parties to a transaction from exercising all their rights and obligations under the transaction documents. This document cannot be reproduced except in full, without prior written approval of the Company. Any unauthorized alteration, forgery or falsification of the content or appearance of this document is unlawful and offenders may be prosecuted to the fullest extent of the law. Unless otherwise stated the results shown in this test report refer only to the sample(s) tested and such sample(s) are retained for 30 days only.
Attention: To check the authenticity of testing /inspection report & certificate, please contact us at telephone: (86-755) 8307 1443, or email: CN.Doccheck@sgs.com
Building 30 and Building 18, Heimudan Science Park, Tianning District, Changzhou, Jiangsu, China 213017 t (86-519) 8558 7753 www.sgsgroup.com.cn
中国·江苏·常州市天宁区黑牡丹科技园30幢、18幢 邮编: 213017 t (86-519) 8558 7753 sgs.china@sgs.com
Member of the SGS Group (SGS SA)

Clause	Test Method & Test Requirement	Rating
	to cause injury or from becoming entrapped in adjoining structures. The surface of any enclosure or barrier shall be such that there is minimal risk of injury from entrapment, impact or abrasion.	
3.2.7	Fall zones	NC
3.2.7.1	Dimensions Where dimensions of the fall zone are not specified in Section 4 for the particular type of equipment, the following minimum dimensions shall apply: (a) For a toddler area, see Figure 3.4. (b) In all other cases, see Figure 3.5. NOTE: The fall zone is measured from the outer perimeter of the equipment. In determining the fall zone, the possible movements of the equipment and the user shall be taken into account. In certain cases, such as a spinner (see Figure 4.1) which gives the user a horizontal velocity, the impact area may need increased impact attenuation to provide adequate protection against falling injuries. Refer to Section 4 for specified fall zone requirements.	NC
3.2.7.2	Objects and surfacing in fall zone	NC
3.2.7.2.1	General Inflatable devices shall comply with the impact attenuating surface requirements contained within AS 3533.4.1. For all other situations Clauses 3.2.7.2.2 and 3.2.7.2.3 shall apply.	NC
3.2.7.2.2	Free height of fall less than or equal to 600 mm Where the free height of fall is less than or equal to 600 mm and the equipment is not used for climbing or forced movement, there are no specific surface requirements. Where the free height of fall is less than or equal to 600 mm and the equipment is used for climbing or forced movement, any object or surface within 1200 mm of the equipment shall have an impact attenuating surface or covering. The surface/covering when tested in accordance with Appendix D at a fall height of 600 mm shall— (a) limit the Gmax value to less than 200G; (b) limit the head injury criteria (HIC) to less than 1000; (c) have an impact HIC event duration (i.e. t2 – t1) of not less than 5 m/s; (d) not exhibit any multi-peaked acceleration pulses with peak to valley differences greater than 10G; and (e) limit the maximum jerk, jmax, to less than 40 000G per second.	NC
3.2.7.2.3	Free height of fall greater than 600 mm Where the free height of fall is greater than 600 mm, there shall be no objects in the potential fall zone and the surface of the potential fall zone shall be covered with an impact attenuating system that, when tested in accordance with Appendix D at the relevant maximum height of fall shall—	NC

通标标准技术服务(常州)有限公司 检验检测专用章 Inspection & Testing Services SGS-CSTC Standards Technical Services (Changzhou) Co., Ltd. Hardlines

Unless otherwise agreed in writing, this document is issued by the Company subject to its General Conditions of Service printed overleaf, available on request or accessible at https://www.sgs.com/en/Terms-and-Conditions. Attention is drawn to the limitation of liability, indemnification and jurisdiction issues defined therein. Any holder of this document is advised that information contained hereon reflects the Company's findings at the time of its intervention only and within the limits of Client's instructions, if any. The Company's sole responsibility is to its Client and this document does not exonerate parties to a transaction from exercising all their rights and obligations under the transaction documents. This document cannot be reproduced except in full, without prior written approval of the Company. Any unauthorized alteration, forgery or falsification of the content or appearance of this document is unlawful and offenders may be prosecuted to the fullest extent of the law. Unless otherwise stated the results shown in this test report refer only to the sample(s) tested and such sample(s) are retained for 30 days only.
Attention: To check the authenticity of testing /inspection report & certificate, please contact us at telephone: (86-755) 8307 1443, or email: CN.Doccheck@sgs.com
Building 30 and Building 18, Heimudan Science Park, Tianning District, Changzhou, Jiangsu, China 213017 t (86-519) 8558 7753 www.sgsgroup.com.cn
中国·江苏·常州市天宁区黑牡丹科技园30幢、18幢 邮编: 213017 t (86-519) 8558 7753 sgs.china@sgs.com
Member of the SGS Group (SGS SA)

Clause	Test Method & Test Requirement	Rating
	(a) limit the Gmax value to less than 200G; (b) limit the head injury criteria (HIC) to less than 1000; (c) have an impact HIC event duration (i.e. t2 −□t1) of not less than 5 m/s; (d) not exhibit any multi-peaked acceleration pulses with peak to valley differences greater than 10G; and (e) limit the maximum jerk, jmax, to less than 40 000G per second.	
3.2.8	Protection against entrapment	P
3.2.8.1	General The entrapment hazards that can occur through distortion of materials during use shall be taken into account when choosing materials. Bound openings (see Figure 3.6) should have no parts that converge in the downward direction at an angle of less than 60°. All contained play equipment shall be tested and meet the requirements in accordance with Appendix E. Figure E12 depicts examples of possible entrapment situations.	P
3.2.8.2	Entrapment of the head and neck Equipment shall be constructed so that any openings do not create head and neck entrapment hazards either by head first or feet first passage. Hazardous situations in which this type of entrapment can be encountered include the following: (a) Completely bound openings (see Figure 3.6) through which a user can slide head first or feet first. (b) Partially bound openings (see Figure 3.7) including V-shaped openings. (c) Shearing or moving openings. When tested in accordance with Paragraph E4.1 and if accessible, completely bound openings with a lower edge more than 600 mm above the ground or standing surface that allow the passage of the small probe, the large probe shall also be able to pass through the opening. Partially bound and V-shaped openings with an entrance at 600 mm or more above the ground or standing surface shall be constructed so that either— (i) the opening is not accessible when tested in accordance with Paragraph E4.2; or (ii) if accessible, when tested in accordance with Paragraph E4.2— (A) the template apex contacts the base of the opening during the test [see Figure E4(b)]; or (B) the template contacts the sides of the opening at a height of less than 600 mm above the ground or standing surface [see Figure E4(c)]. Rigid circular openings shall not have an internal diameter of between 130 mm and 230 mm. Non-rigid members (e.g. ropes) shall not overlap if, by doing so, they create openings that do not conform to the requirements for completely bound openings. Openings between the flexible parts of suspended bridges and any rigid side members shall allow for the insertion of the large head probe under the worst case condition of loading. Both fully loaded and unloaded situations shall be considered.	P

通标标准技术服务（常州）有限公司 检验检测专用章 Inspection & Testing Services SGS-CSTC Standards Technical Services (Changzhou) Co., Ltd. Hardlines

Unless otherwise agreed in writing, this document is issued by the Company subject to its General Conditions of Service printed overleaf, available on request or accessible at https://www.sgs.com/en/Terms-and-Conditions. Attention is drawn to the limitation of liability, indemnification and jurisdiction issues defined therein. Any holder of this document is advised that information contained hereon reflects the Company's findings at the time of its intervention only and within the limits of Client's instructions, if any. The Company's sole responsibility is to its Client and this document does not exonerate parties to a transaction from exercising all their rights and obligations under the transaction documents. This document cannot be reproduced except in full, without prior written approval of the Company. Any unauthorized alteration, forgery or falsification of the content or appearance of this document is unlawful and offenders may be prosecuted to the fullest extent of the law. Unless otherwise stated the results shown in this test report refer only to the sample(s) tested and such sample(s) are retained for 30 days only.
Attention: To check the authenticity of testing /inspection report & certificate, please contact us at telephone: (86-755) 8307 1443, or email: CN.Doccheck@sgs.com
Building 30 and Building 18, Heimudan Science Park, Tianning District, Changzhou, Jiangsu, China 213017 t (86-519) 8558 7753 www.sgsgroup.com.cn
中国·江苏·常州市天宁区黑牡丹科技园30幢、18幢 邮编：213017 t (86-519) 8558 7753 sgs.china@sgs.com
Member of the SGS Group (SGS SA)

Clause	Test Method & Test Requirement	Rating
3.2.8.3	Entrapment of clothing Equipment shall be constructed so that hazardous situations of clothing entrapment, which may result in strangulation, are not created. All hazardous situations shall be tested using the toggle test device (see Paragraph E5). Examples of such situations include the following: (a) Gaps or V-shaped openings in which a part of clothing can become trapped while or immediately before the user is undergoing a forced movement. (b) Protrusions. (c) Spindles and rotating parts. Special consideration shall be given to avoiding clothing entanglement within the falling space when using elements of circular cross section. This can be achieved by use of spacers or similar devices. See Figure 3.8 for an example of the use of a spacer Slides and fireman's poles shall be constructed so that openings located within the free space do not allow the entrapment of clothing including cords and toggles, when tested in accordance with Paragraph E5. Roofs shall be constructed so that they do not allow entrapment of clothing (including cords and toggles when tested in accordance with Paragraph E5. Rotating parts shall have means of preventing entanglement of clothing or hair. This may be achieved by use of suitable covering or shields.	P
3.2.8.4	Entrapment of the whole body Equipment shall be constructed so that hazardous situations of body entrapment are not created. Examples of such situations include the following: (a) Tunnels into which children can crawl with their whole body and become trapped. (b) Suspended parts which are heavy or have rigid suspension, in which entrapment of the whole body can be encountered. Tunnels other than tunnel slides shall conform to the requirements given in Table 3.3. Tunnel slides shall be in accordance with AS 4685.3.	P
3.2.8.5	Entrapment of the foot or leg Equipment shall be constructed so that hazardous situations in which entrapment of the foot or leg can be encountered are not created, such as— (a) completely bound rigid openings in surfaces on which children can run or climb; and (b) footholds, handholds and the like extending from these surfaces. NOTE: In the case of (b) the entrapped foot or ankle can be severely injured if the user falls. To avoid foot or leg entrapment, level surfaces and those inclined at up to 45° intended for running or walking shall not contain any gaps greater than 30 mm, when measured in the direction of travel as shown in Figure 3.9. This requirement does not apply to Burmeeze bridges and suspension bridges (see Figure 4.1 and Clause 4.4.2.5).	P

Unless otherwise agreed in writing, this document is issued by the Company subject to its General Conditions of Service printed overleaf, available on request or accessible at https://www.sgs.com/en/Terms-and-Conditions. Attention is drawn to the limitation of liability, indemnification and jurisdiction issues defined therein. Any holder of this document is advised that information contained hereon reflects the Company's findings at the time of its intervention only and within the limits of Client's instructions, if any. The Company's sole responsibility is to its Client and this document does not exonerate parties to a transaction from exercising all their rights and obligations under the transaction documents. This document cannot be reproduced except in full, without prior written approval of the Company. Any unauthorized alteration, forgery or falsification of the content or appearance of this document is unlawful and offenders may be prosecuted to the fullest extent of the law. Unless otherwise stated the results shown in this test report refer only to the sample(s) tested and such sample(s) are retained for 30 days only.
Attention: To check the authenticity of testing /inspection report & certificate, please contact us at telephone: (86-755) 8307 1443, or email: CN.Doccheck@sgs.com
Building 30 and Building 18, Heimudan Science Park, Tianning District, Changzhou, Jiangsu, China 213017 t (86-519) 8558 7753 www.sgsgroup.com.cn
中国·江苏·常州市天宁区黑牡丹科技园30幢、18幢 邮编: 213017 t (86-519) 8558 7753 sgs.china@sgs.com
Member of the SGS Group (SGS SA)

Clause	Test Method & Test Requirement	Rating
	A physical barrier shall be provided at the edge of the surface to prevent lateral movement or entrapment of the foot or leg, e.g. kick rail. Level surfaces intended for running or walking shall not contain any gaps likely to cause foot or leg entrapments.	
3.2.8.6	Entrapment of fingers Equipment shall be constructed so that hazardous situations in which entrapment of fingers can be encountered, are not created. NOTES: 1 Not all openings in which a finger can be placed will be hazardous. 2 The spaces between decking boards on rigid bridges, ramps and platforms are exempt from finger entrapment provisions, unless they are within the free space requirements of adjacent or attached equipment. Examples of such hazardous situations include the following: (a) Gaps in which fingers can be trapped whilst the remainder of the body is moving or continues in motion involuntarily, for example sliding, swinging, falling. (b) Open-ended tubes or pipes. (c) Variable gaps (excluding chains). Openings within the free space, where the user is subjected to forced movement, and holes which have a lower edge more than 1200 mm above the potential impact area, when tested in accordance with Paragraph E6, shall conform to either of the following requirements: (i) The 8 mm finger rod (see Figure E8), when applied with a force of 30 N, shall not pass through the minimum cross-section of the opening and the profile of the opening shall be such that the rod cannot be locked in any position when set in motion as given in Paragraph E6.2. (ii) If the 8 mm finger rod passes through the opening, the 25 mm finger rod (see Figure E8), when applied with a force of 30 N, shall also pass through the opening, provided that the opening does not permit access to another finger entrapment site. The ends of tubes and pipes shall be closed off to prevent the risk of finger entrapment. The closures shall not be removable without the use of a tool. Gaps whose dimensions change during use of the equipment (e.g. suspension bridges and gates hinges) shall have a minimum dimension in any position of 12 mm when loaded and unloaded.	P
3.2.9	Materials	P
3.2.9.1	Flammability The flammability requirements of materials used in play equipment shall be in accordance with Clause 3.5 of AS 3533.1—2009.	NC
3.2.9.2	Barriers, netting and mesh Equipment should be designed so that hazardous situations where climbing can occur are not created taking into consideration supervision, the increased danger associated with reduced visibility and other safety interventions.	NC

通标标准技术服务(常州)有限公司 检验检测专用章 Inspection & Testing Services SGS-CSTC Standards Technical Services (Changzhou) Co., Ltd. Hardlines

Unless otherwise agreed in writing, this document is issued by the Company subject to its General Conditions of Service printed overleaf, available on request or accessible at https://www.sgs.com/en/Terms-and-Conditions. Attention is drawn to the limitation of liability, indemnification and jurisdiction issues defined therein. Any holder of this document is advised that information contained hereon reflects the Company's findings at the time of its intervention only and within the limits of Client's instructions, if any. The Company's sole responsibility is to its Client and this document does not exonerate parties to a transaction from exercising all their rights and obligations under the transaction documents. This document cannot be reproduced except in full, without prior written approval of the Company. Any unauthorized alteration, forgery or falsification of the content or appearance of this document is unlawful and offenders may be prosecuted to the fullest extent of the law. Unless otherwise stated the results shown in this test report refer only to the sample(s) tested and such sample(s) are retained for 30 days only.
Attention: To check the authenticity of testing /inspection report & certificate, please contact us at telephone: (86-755) 8307 1443, or email: CN.Doccheck@sgs.com
Building 30 and Building 18, Heimudan Science Park, Tianning District, Changzhou, Jiangsu, China 213017 t (86-519) 8558 7753 www.sgsgroup.com.cn
中国·江苏·常州市天宁区黑牡丹科技园30幢、18幢 邮编: 213017 t (86-519) 8558 7753 sgs.china@sgs.com
Member of the SGS Group (SGS SA)

Clause	Test Method & Test Requirement	Rating
	The strand diameter of the material from which any netting or mesh used to contain patrons is made shall be of a size that minimizes the potential for it to cut patrons' extremities. Any flexible barriers, netting or mesh in a contained play structure that is able to be stretched by a force of 220 N applied with the large probe identified in Figure E1 shall not be placed close enough to potential impact hazards such as sharp objects, projections, glass windows or furniture to allow the probe to contact the hazard. Barriers, netting and mesh shall comply with the flammability requirements of Clause 3.2.9.1. Barriers, netting and mesh shall be tested in accordance with the test method described in Appendix J for structural integrity and attachment (fixing) performance.	
3.2.10	Finish of equipment	P
3.2.10.1	General All exposed surfaces shall be of a finish that is able to be sanitized	NC
3.2.10.2	Hard surfaces Where patrons can make head contact with structural elements of the equipment, such elements shall be padded to minimize the severity of injuries.	P
3.2.10.3	Protrusions and sharp edges There shall be no protruding fasteners, projecting wire rope terminations or pointed or sharp-edged components. Protruding bolt threads within any accessible part of the equipment shall be permanently covered, e.g. dome-headed nuts. Nuts and bolt heads that project less than 8 mm shall be free from burrs. Corners, edges and projecting parts within any accessible part of the equipment that project more than 8 mm, and which are not shielded by adjacent areas that are not more than 25 mm from the end of the projecting part, shall be rounded off. The minimum radius of the curve shall be 3 mm. There shall be no sharp-edged parts within any accessible part of the equipment.	P
3.2.10.4	Rough surfaces Rough surfaces shall be designed and manufactured to minimize risk of injury.	P
3.2.10.5	Upholstery Hardware, staples, or fastening devices used in the construction of padding or upholstered equipment shall not have hidden sharp points or hazards when the surface of the pad or upholstered construction is fully compressed by a user.	NC

通标标准技术服务(常州)有限公司 检验检测专用章 Inspection & Testing Services SGS-CSTC Standards Technical Services (Changzhou) Co., Ltd. Hardlines

Unless otherwise agreed in writing, this document is issued by the Company subject to its General Conditions of Service printed overleaf, available on request or accessible at https://www.sgs.com/en/Terms-and-Conditions. Attention is drawn to the limitation of liability, indemnification and jurisdiction issues defined therein. Any holder of this document is advised that information contained hereon reflects the Company's findings at the time of its intervention only and within the limits of Client's instructions, if any. The Company's sole responsibility is to its Client and this document does not exonerate parties to a transaction from exercising all their rights and obligations under the transaction documents. This document cannot be reproduced except in full, without prior written approval of the Company. Any unauthorized alteration, forgery or falsification of the content or appearance of this document is unlawful and offenders may be prosecuted to the fullest extent of the law. Unless otherwise stated the results shown in this test report refer only to the sample(s) tested and such sample(s) are retained for 30 days only.
Attention: To check the authenticity of testing /inspection report & certificate, please contact us at telephone: (86-755) 8307 1443, or email: CN.Doccheck@sgs.com
Building 30 and Building 18, Heimudan Science Park, Tianning District, Changzhou, Jiangsu, China 213017 t (86-519) 8558 7753 www.sgsgroup.com.cn
中国·江苏·常州市天宁区黑牡丹科技园30幢、18幢 邮编: 213017 t (86-519) 8558 7753 sgs.china@sgs.com
Member of the SGS Group (SGS SA)

Clause	Test Method & Test Requirement	Rating
	Securing ties for foam padding shall be cut back and fitted so the loose end does not present a hazard to patrons.	
3.3	LAYOUT AND INSTALLATION	P
3.3.1	General Playing areas should be clearly identified and kept separate from refreshment, seating and other social areas. Measures, such as cover strips, should be used to avoid finger and foot entrapment in doors. Handles should be chamfered or rounded and, where children need to use a door, the handle should be fixed to a height of 600 mm from the standing surface. Fire exits from the facility should be alarmed so that if a customer opens them, either intentionally or unintentionally, there will be a loud audible warning to both deter them from exiting and to warn staff. All electrical general purpose outlets (i.e. electrical powerpoints) in the facility shall have safety plugs inserted when not in use. All electrical leads in publicly accessible areas (e.g. for blowers associated with inflatable devices) shall be unable to be disconnected by patrons or their carers. This may be achieved by mechanical or physical means. Electrical leads shall not present a tripping hazard. Operators need to be mindful of the location of water play devices in relation to electrical devices and supply points.	P
3.3.2	Kitchen, café service and café seating Café seating areas should be located as close as practicable to the café area to minimize the distance that hot drinks and food need to be carried by customers and staff. Café seating areas should have a floor covering that is easily cleaned, e.g. vinyl or painted concrete. The café kitchen, preparation and serving area should have means to restrict access by patrons, e.g. a latched gate. Tables and chairs should be stable with rounded corners and chamfered edges	NA
3.3.3	Toilets The toilet areas should— (a) be easily accessible and well signposted; and (b) have minimal impediments, to offer clear vision for parental supervision.	NA
3.4	INFORMATION TO BE PROVIDED BY THE MANUFACTURER AND SUPPLIER	
3.4.1	General product information Information supplied by the manufacturer/supplier shall be in accordance with	NC

通标标准技术服务(常州)有限公司 检验检测专用章 Inspection & Testing Services SGS-CSTC Standards Technical Services (Changzhou) Co., Ltd. Hardlines

Unless otherwise agreed in writing, this document is issued by the Company subject to its General Conditions of Service printed overleaf, available on request or accessible at https://www.sgs.com/en/Terms-and-Conditions. Attention is drawn to the limitation of liability, indemnification and jurisdiction issues defined therein. Any holder of this document is advised that information contained hereon reflects the Company's findings at the time of its intervention only and within the limits of Client's instructions, if any. The Company's sole responsibility is to its Client and this document does not exonerate parties to a transaction from exercising all their rights and obligations under the transaction documents. This document cannot be reproduced except in full, without prior written approval of the Company. Any unauthorized alteration, forgery or falsification of the content or appearance of this document is unlawful and offenders may be prosecuted to the fullest extent of the law. Unless otherwise stated the results shown in this test report refer only to the sample(s) tested and such sample(s) are retained for 30 days only.
Attention: To check the authenticity of testing /inspection report & certificate, please contact us at telephone: (86-755) 8307 1443, or email: CN.Doccheck@sgs.com
Building 30 and Building 18, Heimudan Science Park, Tianning District, Changzhou, Jiangsu, China 213017 t (86-519) 8558 7753 www.sgsgroup.com.cn
中国·江苏·常州市天宁区黑牡丹科技园30幢、18幢 邮编: 213017 t (86-519) 8558 7753 sgs.china@sgs.com
Member of the SGS Group (SGS SA)

Clause	Test Method & Test Requirement	Rating
	the requirements of this Clause (3.4). Instructions shall be provided in the appropriate language(s) of the country in which the equipment is to be installed and used. The instructions shall comply with the following: (a) Instructions shall be printed legibly and in a simple form. (b) Illustrations shall be used, where possible. (c) Instructions shall include at least the following information: (i) Details of the installation, operation, inspection and maintenance of the equipment. (ii) A statement drawing the operator's attention to the need to increase inspection/maintenance if the equipment is subject to heavy use and/or the stability of the equipment relies on one post. (iii) Advice to take care, in relation to specific hazards to children, due to incomplete installation or dismantling, or during maintenance. Where requested, copies of the test report shall be provided.	
3.4.2	Pre-information Information concerning the safety of the installation prior to acceptance of the order shall be provided, e.g. a catalogue data sheet. This information shall include at least the following, where relevant: (a) The minimum space. (b) Surfacing requirements (including free height of fall and extent of surfacing) (c) The overall dimensions of the largest part(s). (d) The mass of the heaviest part/section, in kilograms. (e) Guidance regarding the target user group for the equipment. (f) If the equipment is intended only for indoor use or under supervised conditions. (g) The availability of spare parts. (h) Reference to this Standard, i.e. AS 3533.4.2.	NC
3.4.3	Installation information An equipment delivery part list with the equipment shall be supplied. Installation instructions for the correct assembly, erection and placing of the equipment shall be supplied. The information shall include at least the following: (a) Minimum space requirements and safety clearances. (b) Equipment and parts identification. (c) Erection sequence (assembly instructions and installation details). (d) Matching aids where necessary, e.g. signs on parts accompanied by appropriate instructions. (e) The need for any special tools, lifting devices, templates or other assembly aids to be used and any precautionary measures to be taken NOTE: Where necessary, torque values should be given. (f) The constructional space required to install the item of equipment. (g) The orientation, where necessary, in relation to sun and wind. (h) Details of the required foundation, under normal conditions, anchorage in the ground and the design and location of the foundation (with a note that	NC

通标标准技术服务(常州)有限公司 检验检测专用章 Inspection & Testing Services SGS-CSTC Standards Technical Services (Changzhou) Co., Ltd.

Unless otherwise agreed in writing, this document is issued by the Company subject to its General Conditions of Service printed overleaf, available on request or accessible at https://www.sgs.com/en/Terms-and-Conditions. Attention is drawn to the limitation of liability, indemnification and jurisdiction issues defined therein. Any holder of this document is advised that information contained hereon reflects the Company's findings at the time of its intervention only and within the limits of Client's instructions, if any. The Company's sole responsibility is to its Client and this document does not exonerate parties to a transaction from exercising all their rights and obligations under the transaction documents. This document cannot be reproduced except in full, without prior written approval of the Company. Any unauthorized alteration, forgery or falsification of the content or appearance of this document is unlawful and offenders may be prosecuted to the fullest extent of the law. Unless otherwise stated the results shown in this test report refer only to the sample(s) tested and such sample(s) are retained for 30 days only.
Attention: To check the authenticity of testing /inspection report & certificate, please contact us at telephone: (86-755) 8307 1443, or email: CN.Doccheck@sgs.com
Building 30 and Building 18, Heimudan Science Park, Tianning District, Changzhou, Jiangsu, China 213017 t (86-519) 8558 7753 www.sgsgroup.com.cn
中国·江苏·常州市天宁区黑牡丹科技园30幢、18幢 邮编: 213017 t (86-519) 8558 7753 sgs.china@sgs.com
Member of the SGS Group (SGS SA)

Clause	Test Method & Test Requirement	Rating
	care needs to be taken concerning abnormal conditions). (i) Specific instructions if a particular landscape profile is necessary for safe operation, e.g. falling height. (j) Free height of fall (for impact attenuation surfacing needs). (k) The need for and details of the application of any painting or treatment. (l) The removal of assembly aids before the equipment is used. Drawings and diagrams shall clearly specify the principal dimensions of the equipment and the relevant space, height and areas required for installation. The details necessary for inspection of the playground equipment prior to its first use shall be supplied. NOTE: Appendix F contains inspection information and schedules	
3.4.4	Inspection and maintenance information Instructions for maintenance and inspection (marked with the number of this Standard) shall be supplied. Refer to Section 6 for full details of the contents of maintenance and inspection information supplied by manufacturers of play equipment.	NC
3.5	INFORMATION TO BE PROVIDED BY THE MANUFACTURER OR SUPPLIER OF IMPACT ATTENUATING SURFACING	
3.5.1	General Information supplied by the manufacturer/supplier of impact attenuating surfacing shall be in accordance with the requirements of this Clause (3.5).	NC
3.5.2	Pre-information Prior to the acceptance of the order, information on the critical fall height of the impact attenuating surfacing as tested shall be provided.	NC
3.5.3	Installation Instructions on the correct installation shall be provided.	NC
3.5.4	Inspection and maintenance Instructions on maintenance and inspection procedures shall be provided.	NC
3.6	MARKING The equipment shall be marked legibly and permanently in English with at least the following: (a) Name and address of manufacturer or supplier. (b) Name and address of distributor, importer or supplier (as applicable). (c) Date of manufacture. (d) Serial number and, if different, model number. (e) Classification of the device in accordance with AS 3533.1	NC

通标标准技术服务(常州)有限公司 检验检测专用章 Inspection & Testing Services SGS-CSTC Standards Technical Services (Changzhou) Co., Ltd. Hardlines

Unless otherwise agreed in writing, this document is issued by the Company subject to its General Conditions of Service printed overleaf, available on request or accessible at https://www.sgs.com/en/Terms-and-Conditions. Attention is drawn to the limitation of liability, indemnification and jurisdiction issues defined therein. Any holder of this document is advised that information contained hereon reflects the Company's findings at the time of its intervention only and within the limits of Client's instructions, if any. The Company's sole responsibility is to its Client and this document does not exonerate parties to a transaction from exercising all their rights and obligations under the transaction documents. This document cannot be reproduced except in full, without prior written approval of the Company. Any unauthorized alteration, forgery or falsification of the content or appearance of this document is unlawful and offenders may be prosecuted to the fullest extent of the law. Unless otherwise stated the results shown in this test report refer only to the sample(s) tested and such sample(s) are retained for 30 days only.
Attention: To check the authenticity of testing /inspection report & certificate, please contact us at telephone: (86-755) 8307 1443, or email: CN.Doccheck@sgs.com
Building 30 and Building 18, Heimudan Science Park, Tianning District, Changzhou, Jiangsu, China 213017 t (86-519) 8558 7753 www.sgsgroup.com.cn
中国·江苏·常州市天宁区黑牡丹科技园30幢、18幢 邮编: 213017 t (86-519) 8558 7753 sgs.china@sgs.com
Member of the SGS Group (SGS SA)

Clause	Test Method & Test Requirement	Rating
	(f) The number of this Standard, i.e. AS 3533.4.2. NOTE: Manufacturers making a statement of compliance with this Australian Standard on a product, packaging or promotional material related to that product are advised to ensure that compliance is capable of being verified.	
Section 4	Specific play equipment requirements	
4.1	In addition to the relevant general requirements specified in this Standard, the specific requirements for certain types of equipment set out in this Section shall be applied as minimum requirements and take precedence over general requirements, where necessary. Specific equipment requirements have been grouped in the following manner: (a) Inflatable devices, see Clause 4.2. (b) Ball-pools, see Clause 4.3. (c) Contained play structures, see Clause 4.4. This Clause provides requirements for a range of components often included in a play structure, including decks, nets/mesh. vertical and horizontal squeeze rollers, Burmeeze bridges, punching bags, clamber ups, ramps, roof nets, spider's webs, tunnels, framework (poles, cable ties, access openings for cleaning, emergencies or storage using zips or other closures), obstacles, clamber nets and climbing ropes. (d) Other play areas, see Clause 4.5. (e) Toddler area, see Clause 4.6. (f) Forced movement devices such as slides, swings, track rides, fireman's poles. trampolines and rotating seats or poles, see Clause 4.7. (g) Mechanical rides, such as merry-go-rounds, see Clause 4.8. (h) Air play devices, such as ball cannons, air fountains, ball showers and vacuums, see Clause 4.9. (i) Climbing structures, such as climbing walls and boulders, see Clause 4.10. For general coverage of aspects such as materials, paint and decorations, flow path, see Section 3.	P
4.2	INFLATABLE DEVICES	
4.2.1	General Inflatable devices that are used in a contained play facility shall comply with AS 3533.4.1 and the requirements specified in this Clause (4.2). Where an inflatable device is used as an integral part of a play structure and there is direct access to the device from an elevated platform, the following shall apply: (a) Transition between the play structure and the inflatable playing surface shall be continuous, i.e. patrons are not required to step across any openings that may be a foot entrapment hazard. (b) The height differential between the playing surfaces of a play structure and an inflatable device shall not exceed 700 mm. (c) In the event of unintended deflation, the design of a play structure and inflatable device shall allow safe transition of patrons from a fixed item, such as an elevated access platform, to the designated exit of the inflatable. (d) The collapse of an inflatable device shall not subject patrons to a fall	NA

通标标准技术服务(常州)有限公司 检验检测专用章 Inspection & Testing Services SGS-CSTC Standards Technical Services (Changzhou) Co., Ltd.

Unless otherwise agreed in writing, this document is issued by the Company subject to its General Conditions of Service printed overleaf, available on request or accessible at https://www.sgs.com/en/Terms-and-Conditions. Attention is drawn to the limitation of liability, indemnification and jurisdiction issues defined therein. Any holder of this document is advised that information contained hereon reflects the Company's findings at the time of its intervention only and within the limits of Client's instructions, if any. The Company's sole responsibility is to its Client and this document does not exonerate parties to a transaction from exercising all their rights and obligations under the transaction documents. This document cannot be reproduced except in full, without prior written approval of the Company. Any unauthorized alteration, forgery or falsification of the content or appearance of this document is unlawful and offenders may be prosecuted to the fullest extent of the law. Unless otherwise stated the results shown in this test report refer only to the sample(s) tested and such sample(s) are retained for 30 days only.
Attention: To check the authenticity of testing /inspection report & certificate, please contact us at telephone: (86-755) 8307 1443, or email: CN.Doccheck@sgs.com
Building 30 and Building 18, Heimudan Science Park, Tianning District, Changzhou, Jiangsu, China 213017 t (86-519) 8558 7753 www.sgsgroup.com.cn
中国·江苏·常州市天宁区黑牡丹科技园30幢、18幢 邮编: 213017 t (86-519) 8558 7753 sgs.china@sgs.com
Member of the SGS Group (SGS SA)

Clause	Test Method & Test Requirement	Rating
	exceeding 700 mm unless there is an impact attenuating surface to suit the actual fall height.	
4.2.2	Containment Where an inflatable device is sited on a raised structure higher than the surrounding building floor level, it shall be roofed in a manner that contains patrons. The inflatable device shall also have a secondary means of containment so that patrons are not put at risk of falls in the event of unintended collapse. NOTE: This may be achieved by a separate, netted structure around the outside of the inflatable device.	NA
4.2.3	Inflatable slides The width of the sliding surface of an inflatable slide shall be no greater than 1500 mm unless measures are in place to prevent uncontrolled descent by multiple patrons.	NA
4.2.4	Anchorage Where the device is positioned permanently within a building and not subject to wind loads, the anchorage system may be varied from the requirements of Clause 6 of AS 3533.4.1— 2005. It shall be designed by a competent person with consideration of the intended purpose of the device, including live and static loads, to prevent movement or overturning. Such a device shall be clearly and permanently marked as compliant with this Standard (i.e. AS 3533.4.2) and being for indoor use only	NA
4.2.5	Blowers Blowers driven by internal combustion engines shall not be used. The electrical power shall be unable to be disconnected by patrons and carers and this can be achieved by mechanical or physical means.	NA
4.2.6	Supervision Where an inflatable device is not directly supervised in accordance with AS 3533.4.1, either— (a) the inflatable shall be fitted with a roof to contain patrons; or (b) impact attenuating material appropriate to the free height of fall from the top of the inflatable wall to the ground shall be provided on the ground outside the walls. Supervision of the inflatable shall be determined by a risk assessment. This should take into account the number of patrons and carers and consider the supervision issues identified in AS 3533.4.1.	NA
4.3	BALL-POOLS	
4.3.1	Design	NA

Unless otherwise agreed in writing, this document is issued by the Company subject to its General Conditions of Service printed overleaf, available on request or accessible at https://www.sgs.com/en/Terms-and-Conditions. Attention is drawn to the limitation of liability, indemnification and jurisdiction issues defined therein. Any holder of this document is advised that information contained hereon reflects the Company's findings at the time of its intervention only and within the limits of Client's instructions, if any. The Company's sole responsibility is to its Client and this document does not exonerate parties to a transaction from exercising all their rights and obligations under the transaction documents. This document cannot be reproduced except in full, without prior written approval of the Company. Any unauthorized alteration, forgery or falsification of the content or appearance of this document is unlawful and offenders may be prosecuted to the fullest extent of the law. Unless otherwise stated the results shown in this test report refer only to the sample(s) tested and such sample(s) are retained for 30 days only.
Attention: To check the authenticity of testing /inspection report & certificate, please contact us at telephone: (86-755) 8307 1443, or email: CN.Doccheck@sgs.com
Building 30 and Building 18, Heimudan Science Park, Tianning District, Changzhou, Jiangsu, China 213017 t (86-519) 8558 7753 www.sgsgroup.com.cn
中国·江苏·常州市天宁区黑牡丹科技园30幢、18幢 邮编: 213017 t (86-519) 8558 7753 sgs.china@sgs.com
Member of the SGS Group (SGS SA)

Clause	Test Method & Test Requirement	Rating
	Balls shall be of a material of mass and density that is not likely to cause an injury to a patron struck by one. Balls that can absorb fluid, such as those made of fabric or open cell foams shall not be used. When tested in accordance with Appendix H balls in ball-pools shall not pass entirely through the specified template. The depth of the balls in ball-pools shall not exceed 400 mm as measured when there are no patrons are in the pool. Ball-pools should be designed to minimize ball spillage during normal play. The ball-pool base shall be designed to prevent objects that might present a hazard from being lodged in gaps. The entry and surrounds of ball-pools shall be designed to minimize the opportunity for jumping into the ball-pool. Entry to ball-pools for general play shall not be by forced movement except where they meet the requirements of Clause 4.3.2. Any point of entry into a ball-pool or any accessible platform within a ball-pool shall not exceed the top of the balls by more than 300 mm. The base of ball-pools shall have a minimum impact attenuating surface tested in accordance with Appendix D to suit a 700 mm critical fall height.	
4.3.2	Ball-pools used as landing areas after forced movement Ball-pools shall only be used as landing areas after forced movement, e.g. as part of a slide run-out area, if they are— (a) separated from ball-pool areas used for general play; (b) gated to restrict access when not operating; (c) impact attenuating surface from the end of the slide run-out; and (d) clear of obstructions. The base of ball-pools used as landing areas shall have a minimum impact attenuating surface tested in accordance with Appendix D to exceed a 1000 mm critical fall height with a minimum fall zone of 2000 mm. The ball-pool area is to be directly supervised by a member of staff to ensure that patrons are— (i) restricted to devices appropriate for their age and ability in accordance with the manufacturer's recommendations; and (ii) clear of the ball-pool before the next patron uses the device.	NA
4.4	CONTAINED PLAY STRUCTURE	
4.4.1	General Users shall not be able to enter or exit from the contained play structure except at designated points. Where there are differences in height between two consecutive designated play surfaces, the requirements in Clause 3.2.7.2 shall apply. Differences in height between two consecutive designated play surfaces shall not exceed 600 mm in locations where it is possible to enter the lower designated play surface from a passage blind to a user on the upper designated play surface. The contained play structure should be designed so that play areas can be	P

通标标准技术服务(常州)有限公司 检验检测专用章 Inspection & Testing Services SGS-CSTC Standards Technical Services (Changzhou) Co., Ltd.

Unless otherwise agreed in writing, this document is issued by the Company subject to its General Conditions of Service printed overleaf, available on request or accessible at https://www.sgs.com/en/Terms-and-Conditions. Attention is drawn to the limitation of liability, indemnification and jurisdiction issues defined therein. Any holder of this document is advised that information contained hereon reflects the Company's findings at the time of its intervention only and within the limits of Client's instructions, if any. The Company's sole responsibility is to its Client and this document does not exonerate parties to a transaction from exercising all their rights and obligations under the transaction documents. This document cannot be reproduced except in full, without prior written approval of the Company. Any unauthorized alteration, forgery or falsification of the content or appearance of this document is unlawful and offenders may be prosecuted to the fullest extent of the law. Unless otherwise stated the results shown in this test report refer only to the sample(s) tested and such sample(s) are retained for 30 days only.
Attention: To check the authenticity of testing /inspection report & certificate, please contact us at telephone: (86-755) 8307 1443, or email: CN.Doccheck@sgs.com
Building 30 and Building 18, Heimudan Science Park, Tianning District, Changzhou, Jiangsu, China 213017 t (86-519) 8558 7753 www.sgsgroup.com.cn
中国·江苏·常州市天宁区黑牡丹科技园30幢、18幢 邮编: 213017 t (86-519) 8558 7753 sgs.china@sgs.com
Member of the SGS Group (SGS SA)

Clause	Test Method & Test Requirement	Rating
	easily observed.	
4.4.2	Play components	
4.4.2.1	General Components included in this group include but are not limited to the following. Figure 4.1 contains a range of common play components that a typical play structure could include. This does not include forced movement devices, see Clause 4.7. All play components within the contained play structure shall be appropriately secured.	P
4.4.2.2	Fixed and rotating obstacles These include fixed obstacles such as wedges, cylindrical shapes, blocks, stretched fabric and similar devices. It also includes rotating obstacles such as horizontal and vertical rollers, but excluding spinners. The clearance between any two surfaces of the fixed obstacles shall be greater than 230 mm. Where there are three or more consecutive horizontal obstacles, a gap of 500 mm is required between opposing surfaces of the obstacles. The minimum radius of any hard protruding fixed obstacle such as a wedge shall be no less than 10 mm. Where rotating obstacles are designed for the patron to squeeze through they shall meet with the test methods for entrapment described in Appendix E. Alternate access for carers shall be provided to both sides of these obstacles. Special consideration shall be given to avoid clothing and hair entrapment in rotating obstacles.	NA
4.4.2.3	Suspended obstacles Suspended obstacles include punching bags, suspended medicine balls, noodles and similar devices. The suspended obstacles shall meet with the test methods for entrapment described in Appendix E. If the suspended obstacle has a density greater than 45 kg/m^3 it shall be required to be restrained so it cannot travel more than 15° from its centre-line. Exposed chains shall not allow a 7.0 mm diameter probe to enter except where connections are made. Where connections are made and where a 7.0 mm probe enters, the 12 mm probe shall also enter. S-hooks shall not be used as connectors. NOTE: Chains that comply with AS 2321 meet these requirements.	NA
4.4.2.4	Spider's webs These include contained pathways fitted with rigid, semi rigid or flexible members attached at two or more points to provide an agility obstacle. Examples of flexible members include rope, elastic cord, short link chain, rigid poles or other such materials, see Figure 4.2.	NA

Unless otherwise agreed in writing, this document is issued by the Company subject to its General Conditions of Service printed overleaf, available on request or accessible at https://www.sgs.com/en/Terms-and-Conditions. Attention is drawn to the limitation of liability, indemnification and jurisdiction issues defined therein. Any holder of this document is advised that information contained hereon reflects the Company's findings at the time of its intervention only and within the limits of Client's instructions, if any. The Company's sole responsibility is to its Client and this document does not exonerate parties to a transaction from exercising all their rights and obligations under the transaction documents. This document cannot be reproduced except in full, without prior written approval of the Company. Any unauthorized alteration, forgery or falsification of the content or appearance of this document is unlawful and offenders may be prosecuted to the fullest extent of the law. Unless otherwise stated the results shown in this test report refer only to the sample(s) tested and such sample(s) are retained for 30 days only.
Attention: To check the authenticity of testing /inspection report & certificate, please contact us at telephone: (86-755) 8307 1443, or email: CN.Doccheck@sgs.com
Building 30 and Building 18, Heimudan Science Park, Tianning District, Changzhou, Jiangsu, China 213017 t (86-519) 8558 7753 www.sgsgroup.com.cn
中国·江苏·常州市天宁区黑牡丹科技园30幢、18幢 邮编: 213017 t (86-519) 8558 7753 sgs.china@sgs.com
Member of the SGS Group (SGS SA)

Clause	Test Method & Test Requirement	Rating
	Materials selected for the flexible members shall remain taut and in position to prevent strangulation hazards such as looping of components. The flexible member materials selected shall withstand the expected usage. Ongoing inspection and maintenance shall be conducted to ensure that hazards such as looping of de-elasticized cord are not introduced. Known hazards include strangulation and entrapment. Spider's webs shall be tested for entrapment both loaded and unloaded in accordance with the test methods for entrapment contained within Appendix E. They shall be accessible from both ends to allow for removal of patrons and maintenance.	
4.4.2.5	Burmeeze bridge and balance beams Burmeeze bridges include non-rigid suspended pathways with a primary containment system, such as cargo nets, that lead from one platform to another. A secondary containment system shall be provided around burmeeze bridges where the primary containment system allows the passage of limbs. Burmeeze bridges shall have hand supports on either side to assist the patrons balance, see Figure 4.1. Balance beams include moving and non-moving rigid pathways where the intended body support is no greater than 300 mm in width. Where the fall height of the balance beam is greater than 300 mm an alternative means of egress for toddlers shall be provided.	NA
4.4.2.6	Climbing ramps These include surfaces with an incline angle between 15° to 45°. Examples of these are clamber ups and activity ramps. See Figures 4.3 and 4.4 for an example of a clamber up and an activity ramp. Where the overall height of the ramp is more than 2000 mm above the final fall surface, intermediate landings shall be provided at height intervals not exceeding 2000 mm. The intermediate landing shall be at least as wide as the ramp and no less than 950 mm long. The landings shall have a falling surface with a critical fall height of at least 1000 mm. The final falling surface shall meet one of the following: (a) Extend at least 1500 mm along the axis of travel and 500 mm either side of the ramp exit zone. (b) Extend at least 950 mm to an impact attenuating vertical surface or structural members tested to a critical fall height of at least 1000 mm. This wall shall be at least 1500 mm high.	NA
4.5	OTHER PLAY AREAS	
4.5.1	General All other play areas, e.g. dress-ups, computer tables, coin-operated machines, activity tables etc., shall be risk assessed to ensure all hazards are eliminated or controlled.	NA
4.5.2	Patron propelled vehicles	NA

Unless otherwise agreed in writing, this document is issued by the Company subject to its General Conditions of Service printed overleaf, available on request or accessible at https://www.sgs.com/en/Terms-and-Conditions. Attention is drawn to the limitation of liability, indemnification and jurisdiction issues defined therein. Any holder of this document is advised that information contained hereon reflects the Company's findings at the time of its intervention only and within the limits of Client's instructions, if any. The Company's sole responsibility is to its Client and this document does not exonerate parties to a transaction from exercising all their rights and obligations under the transaction documents. This document cannot be reproduced except in full, without prior written approval of the Company. Any unauthorized alteration, forgery or falsification of the content or appearance of this document is unlawful and offenders may be prosecuted to the fullest extent of the law. Unless otherwise stated the results shown in this test report refer only to the sample(s) tested and such sample(s) are retained for 30 days only.
Attention: To check the authenticity of testing /inspection report & certificate, please contact us at telephone: (86-755) 8307 1443, or email: CN.Doccheck@sgs.com
Building 30 and Building 18, Heimudan Science Park, Tianning District, Changzhou, Jiangsu, China 213017 t (86-519) 8558 7753 www.sgsgroup.com.cn
中国·江苏·常州市天宁区黑牡丹科技园30幢、18幢 邮编: 213017 t (86-519) 8558 7753 sgs.china@sgs.com
Member of the SGS Group (SGS SA)

Clause	Test Method & Test Requirement	Rating
	Patron propelled vehicles such as ride-on bikes and cars shall be contained with a barrier not less than 400 mm in height within an area with access gaps or gates which do not allow the vehicles to pass. These measures ensure that the play equipment is prevented from moving into the facility area or entering the café seating area where a trip injury may result or they could block access ways. Patron propelled vehicles shall be installed within a designated fenced or contained area. There shall be no crushing points or shearing points between moving and/or stationary parts of the equipment. Entrapment hazards such as those on chain-driven or geared vehicles shall be guarded. The number of vehicles per unit of play area shall be determined by conducting a risk assessment.	
4.6	TODDLER AREA The area and equipment shall be contained with a continuous barrier of equal to or greater than 400 mm in height. It should be designed to suit the age range and ability of a toddler. Where gate access is provided it shall be a self-closing gate fitted with a child-proof latch. NOTE: The purpose of the barrier is to minimize the incidence of— (a) very young patrons crawling out unsupervised; (b) mobile equipment being taken out of the toddler area; or (c) older patrons easily accessing the toddler area. The floor shall be protected with an impact attenuating surface commensurate with the associated fall height and tested in accordance with Clause 3.2.7.2. Where the toddler area contains equipment that can readily be moved the entire toddler area shall have an impact attenuating surface that has a minimum critical fall height rating greater than or equal to the maximum fall height. Specific equipment within the toddler area shall comply with the requirements of Section 4.	P
4.7	FORCED MOVEMENT DEVICES	
4.7.1	General This Clause (4.7) specifies safety requirements for forced movement devices. Where these safety requirements conflict with general requirements these specific requirements will take precedence over the general requirements.	P
4.7.2	Slides	
4.7.2.1	General All slides shall be designed to ensure that patrons do not leave the sliding surface during motion. For waterslides, the requirements in AS 3533.1 shall apply. For inflatable slides the requirements in Clause 4.2 shall apply. Slides consisting of a series	P

通标标准技术服务（常州）有限公司 检验检测专用章 Inspection & Testing Services SGS-CSTC Standards Technical Services (Changzhou) Co., Ltd. Hardlines

Unless otherwise agreed in writing, this document is issued by the Company subject to its General Conditions of Service printed overleaf, available on request or accessible at https://www.sgs.com/en/Terms-and-Conditions. Attention is drawn to the limitation of liability, indemnification and jurisdiction issues defined therein. Any holder of this document is advised that information contained hereon reflects the Company's findings at the time of its intervention only and within the limits of Client's instructions, if any. The Company's sole responsibility is to its Client and this document does not exonerate parties to a transaction from exercising all their rights and obligations under the transaction documents. This document cannot be reproduced except in full, without prior written approval of the Company. Any unauthorized alteration, forgery or falsification of the content or appearance of this document is unlawful and offenders may be prosecuted to the fullest extent of the law. Unless otherwise stated the results shown in this test report refer only to the sample(s) tested and such sample(s) are retained for 30 days only.
Attention: To check the authenticity of testing /inspection report & certificate, please contact us at telephone: (86-755) 8307 1443, or email: CN.Doccheck@sgs.com
Building 30 and Building 18, Heimudan Science Park, Tianning District, Changzhou, Jiangsu, China 213017 t (86-519) 8558 7753 www.sgsgroup.com.cn
中国·江苏·常州市天宁区黑牡丹科技园30幢、18幢 邮编：213017 t (86-519) 8558 7753 sgs.china@sgs.com
Member of the SGS Group (SGS SA)

Clause	Test Method & Test Requirement	Rating
	of rollers shall not be installed in contained play facilities.	
4.7.2.2	Starting section Access to the starting section (see Figure 4.5) shall be by means of a platform. Slides shall have barrier across the access opening (see Figure 4.6). The barrier shall extend across the width of the slide. The surface of the starting section to the underside of the barrier shall be between 600 mm and 900 mm above the starting section. The barrier and the area above it shall be designed to prevent users swinging on or going over the barrier. The starting section of a slide with a free height of fall of greater than 1.5 m shall be fully enclosed with walls and a roof to at least 1500 mm beyond the commencement of the sliding section.	P
4.7.2.3	Sliding section	
4.7.2.3.1	General Any part of the sliding section (see Figure 4.5) that has a free height of fall greater than 1.5 m shall be fully enclosed with walls and roof or provided with other protection of a height of 1.8 m vertically above the sliding surface to prevent a user falling from the sliding surface.	P
4.7.2.3.2	Angle of the sliding section For slides other than free-fall slides, the angle of declination to the horizontal of the sliding section shall not exceed 60°. The declination of the sliding section shall be measured from the centre-line. If the changes in angle of declination of slides are greater than 15°, other than for the transitional part between the starting section and the sliding section, the change in angle shall not allow the user to become involuntarily airborne. Slides shall be designed to prevent the user stopping unintentionally before reaching the run-out section.	P
4.7.2.3.3	Transitions between sliding surfaces Slides shall transition from the sliding section to the run-out section through a radius of at least 1500 mm.	NC
4.7.2.3.4	Width of sliding section Slides shall have a width (W) of the sliding section of at least 300 mm for slides for toddler areas or 410 mm otherwise. The width of the slide shall be measured as shown in Figure 4.7 as appropriate for the slide profile. For slides (other than inflatable slides) where sliding sections are greater than 1500 mm in length and the width of the sliding surface is greater than 950 mm, controls shall be implemented to minimize the risk of injuries resulting from impacts for simultaneous use by	P

通标标准技术服务(常州)有限公司 检验检测专用章 Inspection & Testing Services SGS-CSTC Standards Technical Services (Changzhou) Co., Ltd. Hardlines

Unless otherwise agreed in writing, this document is issued by the Company subject to its General Conditions of Service printed overleaf, available on request or accessible at https://www.sgs.com/en/Terms-and-Conditions. Attention is drawn to the limitation of liability, indemnification and jurisdiction issues defined therein. Any holder of this document is advised that information contained hereon reflects the Company's findings at the time of its intervention only and within the limits of Client's instructions, if any. The Company's sole responsibility is to its Client and this document does not exonerate parties to a transaction from exercising all their rights and obligations under the transaction documents. This document cannot be reproduced except in full, without prior written approval of the Company. Any unauthorized alteration, forgery or falsification of the content or appearance of this document is unlawful and offenders may be prosecuted to the fullest extent of the law. Unless otherwise stated the results shown in this test report refer only to the sample(s) tested and such sample(s) are retained for 30 days only.
Attention: To check the authenticity of testing /inspection report & certificate, please contact us at telephone: (86-755) 8307 1443, or email: CN.Doccheck@sgs.com
Building 30 and Building 18, Heimudan Science Park, Tianning District, Changzhou, Jiangsu, China 213017 t (86-519) 8558 7753 www.sgsgroup.com.cn
中国·江苏·常州市天宁区黑牡丹科技园30幢、18幢 邮编: 213017 t (86-519) 8558 7753 sgs.china@sgs.com
Member of the SGS Group (SGS SA)

Clause	Test Method & Test Requirement	Rating
	patrons. For inflatable slides, see Clause 4.2.3.	
4.7.2.3.5	Sides and profile of the slide The sliding section shall have solid lateral protection of heights (p) as given in Table 4.5, when measured perpendicular to the sliding section surface. For flat-sided slides, the sides shall not tip out from the vertical by more than 30°. The edges of the sides shall be rounded with a radius of at least 3 mm or provided with a means for protection from injury to the user. In the case of multi-track slides, the track divider shall have a minimum height of 50 mm and shall be rounded with a radius of at least 3 mm. Track dividers shall be provided for the full length of the sliding section as a minimum.	P
4.7.2.4	Run-out section The length of the run-out section shall comply with the following: (a) All slides shall include a run-out section. The run-out section shall bring the user to rest in a smooth and safe manner. (b) The declination of the run-out section shall be a maximum of 5°. (c) A circulation space shall be provided at the slide exit. (d) The velocity of the user shall be 0 m/s before the end of the run-out section unless a bump-stop is provided. When a bump-stop is provided the maximum impact velocity shall be less than 0.5 m/s. The bump-stop shall attenuate the impact as specified below. The bump-stop shall be a minimum of 800 mm in height when measured vertically from top of the run-out section surface. The bump-stop shall have impact attenuating properties with a critical fall height of at least 1000 mm when tested in accordance with Appendix D: (i) Limit the Gmax value to less than 200G. (ii) Limit the head injury criteria (HIC) to less than 1000. (iii) Have an impact HIC event duration (i.e. t2 – t1) of not less than 5 m/s. (iv) Not exhibit any multi-peaked acceleration pulses with peak to valley differences greater than 10G. (v) Limit the maximum jerk, jmax, to less than 40 000G per second. The height of the end of the run-out section above the fall zone shall be less than 200 mm for toddler areas or less than 350 mm for other slides. The fall zone shall extend 1000 mm beyond the end of the run-out section and extending across the full width of the slide. No run-out section fall zone is required for slides with a run-out section fall height less than or equal to 100 mm. When the fall height of the run-out section is greater than 100 mm the run-out section fall zone shall have surfacing with a critical fall height of at least 1000 mm when tested in accordance with Appendix D: (A) Limit the Gmax value to less than 200G. (B) Limit the head injury criteria (HIC) to less than 1000. (C) Have an impact HIC event duration (i.e. t2 – t1) of not less than 5 m/s. (D) Not exhibit any multi-peaked acceleration pulses with peak to valley differences greater than 10G. (E) Limit the maximum jerk, jmax, to less than 40 000G per second.	P

通标标准技术服务（常州）有限公司 检验检测专用章 Inspection & Testing Services SGS-CSTC Standards Technical Services (Changzhou) Co., Ltd. Hardlines

Unless otherwise agreed in writing, this document is issued by the Company subject to its General Conditions of Service printed overleaf, available on request or accessible at https://www.sgs.com/en/Terms-and-Conditions. Attention is drawn to the limitation of liability, indemnification and jurisdiction issues defined therein. Any holder of this document is advised that information contained hereon reflects the Company's findings at the time of its intervention only and within the limits of Client's instructions, if any. The Company's sole responsibility is to its Client and this document does not exonerate parties to a transaction from exercising all their rights and obligations under the transaction documents. This document cannot be reproduced except in full, without prior written approval of the Company. Any unauthorized alteration, forgery or falsification of the content or appearance of this document is unlawful and offenders may be prosecuted to the fullest extent of the law. Unless otherwise stated the results shown in this test report refer only to the sample(s) tested and such sample(s) are retained for 30 days only.
Attention: To check the authenticity of testing /inspection report & certificate, please contact us at telephone: (86-755) 8307 1443, or email: CN.Doccheck@sgs.com
Building 30 and Building 18, Heimudan Science Park, Tianning District, Changzhou, Jiangsu, China 213017 t (86-519) 8558 7753 www.sgsgroup.com.cn
中国·江苏·常州市天宁区黑牡丹科技园30幢、18幢 邮编：213017 t (86-519) 8558 7753 sgs.china@sgs.com
Member of the SGS Group (SGS SA)

Clause	Test Method & Test Requirement	Rating
	The mat thickness shall not be included in calculating the fall height.	
4.7.2.5	Surface of the slide The design of slides and accessible structures around them shall be such that they meet the requirements for protection against entrapment in Clause 3.2.8. NOTE: If the slide surface is constructed from more than one piece of material it should be fabricated to eliminate gaps at the joints so that they inhibit the introduction of sharp objects such as razor blades and splinters. The preferred method of protecting against this problem is by manufacturing one piece slide surfaces.	P
4.7.2.6	Free space The free space starts at the beginning of the starting section and finishes at the end of the run-out section (see Figure 4.5). Structural features and slide features, e.g. top rails, hoods or netting, may be present in the free space as they provide additional safety. If present, any such features shall conform to the relevant requirements in this Standard, e.g. entrapment in Clause 3.2.8, materials in Clause 3.2.9 and finish of equipment in Clause 3.2.10. For non-tunnel spiral slides, the height of the free space shall be 1000 mm minimum. In the case of multi-track slides, the free spaces may overlap.	P
4.7.3	Tunnel and mixed tunnel slides Enclosed sections of tunnel slides shall have a minimum internal height of 750 mm, when measured perpendicular to the sliding surface, and a minimum internal width of 750 mm. Tunnel sections shall start at least at the end of the starting section. Tunnel sections shall be continuous over their whole length.	NA
4.7.4	Free-fall slides	
4.7.4.1	General Free-fall slides shall be supervised when they are in use. Controls shall be implemented to ensure patrons arms and legs remain within their track. This may be achieved by physical barriers and/or supervision.	NA
4.7.4.2	Access Access to the starting section shall be secured to prevent access to patrons when trained staff are unavailable to monitor safe use of the free fall slides.	NA
4.7.4.3	Width of the sliding section For slides (other than inflatable slides) where sliding sections are greater than 1500 mm in length and the width of the sliding surface is greater than 950 mm, controls shall be implemented to minimize the risk of injuries resulting	NA

Unless otherwise agreed in writing, this document is issued by the Company subject to its General Conditions of Service printed overleaf, available on request or accessible at https://www.sgs.com/en/Terms-and-Conditions. Attention is drawn to the limitation of liability, indemnification and jurisdiction issues defined therein. Any holder of this document is advised that information contained hereon reflects the Company's findings at the time of its intervention only and within the limits of Client's instructions, if any. The Company's sole responsibility is to its Client and this document does not exonerate parties to a transaction from exercising all their rights and obligations under the transaction documents. This document cannot be reproduced except in full, without prior written approval of the Company. Any unauthorized alteration, forgery or falsification of the content or appearance of this document is unlawful and offenders may be prosecuted to the fullest extent of the law. Unless otherwise stated the results shown in this test report refer only to the sample(s) tested and such sample(s) are retained for 30 days only.
Attention: To check the authenticity of testing /inspection report & certificate, please contact us at telephone: (86-755) 8307 1443, or email: CN.Doccheck@sgs.com
Building 30 and Building 18, Heimudan Science Park, Tianning District, Changzhou, Jiangsu, China 213017 t (86-519) 8558 7753 www.sgsgroup.com.cn
中国·江苏·常州市天宁区黑牡丹科技园30幢、18幢 邮编: 213017 t (86-519) 8558 7753 sgs.china@sgs.com
Member of the SGS Group (SGS SA)

Clause	Test Method & Test Requirement	Rating
	from impacts for simultaneous use by patrons. Multi-track slides, the track divider shall have a minimum height of 150 mm and shall be rounded with a radius of at least 10 mm. Track dividers shall be provided for the full length of the sliding section as a minimum.	
4.7.5	Swings Swings shall comply with the requirements of AS 4685.2. Additionally, swings shall be in a fenced area with a single entrance to prevent through traffic entering the free space of a swing.	NA
4.7.6	Track rides These are rigid forced movement devices where the user is supported by either hanging or seated from a guided carriage that is constrained to move horizontally. Inclined trackways shall be risk assessed by a competent person. The end stop positions and the free space provisions shall be increased commensurate with the increased risk [see Figure 4.8(A)]. NOTE: For non-rigid forced movement device, i.e. flying foxes, see AS 4685.4. The traveller shall be fixed into position within the overhead track with movement restricted by the provision of end stops. The traveller shall be constructed so that it cannot be dislodged. There shall be no crushing points or shearing points between parts of the equipment. Impact forces shall be attenuated with appropriate end stop buffers. The end stops shall be located a minimum of 800 mm from the end of the enclosure. End stops shall be installed at both ends of the track. NOTE: The purpose of the buffer is to prevent metal to metal contact with the finger crushed between the trolley and the end stop. Travellers shall be provided with means to prevent accidental access to the sheaves or moving parts. The traveller shall be protected to prevent the possibility of the users trapping their fingers in the overhead track as the traveller moves along. There shall be only one traveller on each overhead track. For overhead track rides arranged in parallel, a barrier shall be installed between the two units. Linkage elements shall be designed to facilitate grip and, where ropes are used, they shall be between 16 mm and 45 mm in diameter. Seats shall be designed so that the user can get off the seat at any time. Seats shall be made of, or covered by, suitable impact attenuating material. The underside of the seat shall have a minimum ground clearance of 350 mm. Seats comprising hoops or straps are unsuitable. The maximum speed of the traveller shall not exceed 3 m/s during normal usage. Clearance shall be provided to a distance of at least 1 m to each side of the overhead track unless a suitable form of enclosure is provided [see Figure 4.8(B)]. Impact attenuating surfacing shall be provided in accordance with Clause 3.2.7.	NA

Unless otherwise agreed in writing, this document is issued by the Company subject to its General Conditions of Service printed overleaf, available on request or accessible at https://www.sgs.com/en/Terms-and-Conditions. Attention is drawn to the limitation of liability, indemnification and jurisdiction issues defined therein. Any holder of this document is advised that information contained hereon reflects the Company's findings at the time of its intervention only and within the limits of Client's instructions, if any. The Company's sole responsibility is to its Client and this document does not exonerate parties to a transaction from exercising all their rights and obligations under the transaction documents. This document cannot be reproduced except in full, without prior written approval of the Company. Any unauthorized alteration, forgery or falsification of the content or appearance of this document is unlawful and offenders may be prosecuted to the fullest extent of the law. Unless otherwise stated the results shown in this test report refer only to the sample(s) tested and such sample(s) are retained for 30 days only.
Attention: To check the authenticity of testing /inspection report & certificate, please contact us at telephone: (86-755) 8307 1443, or email: CN.Doccheck@sgs.com
Building 30 and Building 18, Heimudan Science Park, Tianning District, Changzhou, Jiangsu, China 213017 t (86-519) 8558 7753 www.sgsgroup.com.cn
中国·江苏·常州市天宁区黑牡丹科技园30幢、18幢 邮编: 213017 t (86-519) 8558 7753 sgs.china@sgs.com
Member of the SGS Group (SGS SA)

Clause	Test Method & Test Requirement	Rating
4.7.7	Spider mountains These devices are vertical multi-level flexible spider web-climbers with inherent fall prevention. These devices offer an agility obstacle that provides a vertical ascent and controlled descent through semi rigid or flexible members attached at two or more points. Flexible member material includes elastic rope. The design should ensure that both ascent and descent can occur simultaneously. Materials selected for the flexible members shall remain taut and in position to prevent strangulation hazards such as looping of components. The flexible member materials selected shall withstand the expected usage. Ongoing inspection and maintenance shall be conducted to ensure that hazards such as looping of de-elasticized cord are not introduced. Known hazards include strangulation and entrapment. Spider mountains shall be tested for entrapment both loaded and unloaded in accordance with the test methods for entrapment contained within Appendix E. The design shall provide multiple exit points. This may be provided by openings at both ends.	NA
4.7.8	Trampolines A risk assessment shall be conducted by a competent person to ensure the design and installation of the equipment is suitable for contained-play. Contained-play trampolines shall comply with AS 4989 with the exception that the overhead clearance and fall zone may be reduced subject to the risk assessment. In any case vertical clearance between the bed and the ceiling shall be greater than 3000 mm. Trampoline fall zones shall be controlled with netting or vertical mounted impact attenuating surfacing. Supervision of the trampoline shall be determined by a risk assessment. This should take into account the number of patrons and carers. The level of control and supervision shall be modified to suit patronage. Trampolines shall have a common entrance and exit that prohibits through traffic.	NA
4.7.9	Fireman’s poles Fireman’s poles are not recommended in contained play structures unless a competent person has conducted a risk assessment. Vertical access points from deck to deck, such as holes for fireman’s poles, shall not be installed unless suitable measures are taken to prevent accidental falls by patrons already on the upper deck. Access holes shall be away from thoroughfares or traffic flows or shall be guarded to prevent children unexpectedly falling through the hole. The falling space and free space of a fireman’s pole (see Figure 4.9) shall also be outside of thoroughfares and traffic flows. The free height of fall to the lower deck shall not exceed 1500 mm for toddler areas. If the fall is greater than 1500 mm in other play areas, the upper end of the fireman’s pole shall be secured to prevent access to patrons when trained	NA

通标标准技术服务（常州）有限公司 检验检测专用章 Inspection & Testing Services SGS-CSTC Standards Technical Services (Changzhou) Co., Ltd. Hardlines

Unless otherwise agreed in writing, this document is issued by the Company subject to its General Conditions of Service printed overleaf, available on request or accessible at https://www.sgs.com/en/Terms-and-Conditions. Attention is drawn to the limitation of liability, indemnification and jurisdiction issues defined therein. Any holder of this document is advised that information contained hereon reflects the Company's findings at the time of its intervention only and within the limits of Client's instructions, if any. The Company's sole responsibility is to its Client and this document does not exonerate parties to a transaction from exercising all their rights and obligations under the transaction documents. This document cannot be reproduced except in full, without prior written approval of the Company. Any unauthorized alteration, forgery or falsification of the content or appearance of this document is unlawful and offenders may be prosecuted to the fullest extent of the law. Unless otherwise stated the results shown in this test report refer only to the sample(s) tested and such sample(s) are retained for 30 days only.
Attention: To check the authenticity of testing /inspection report & certificate, please contact us at telephone: (86-755) 8307 1443, or email: CN.Doccheck@sgs.com
Building 30 and Building 18, Heimudan Science Park, Tianning District, Changzhou, Jiangsu, China 213017 t (86-519) 8558 7753 www.sgsgroup.com.cn
中国·江苏·常州市天宁区黑牡丹科技园30幢、18幢 邮编：213017 t (86-519) 8558 7753 sgs.china@sgs.com
Member of the SGS Group (SGS SA)

Clause	Test Method & Test Requirement	Rating
	staff are unavailable to monitor the safe use of the fireman's pole.	
4.7.10	Rotating seats and poles Rotating seats (spinners) and poles shall be located in dedicated areas and not within a thoroughfare. A minimum free space of 500 mm shall be provided around rotating seats. The surface in the free space around the seats shall have impact attenuating surfacing to suit at least a free height of fall of 1000 mm. The seat surface shall be no more than 250 mm above this surrounding surface. Rotating seats shall be designed so that the maximum speed at the periphery, under normal conditions or reasonably foreseeable conditions of use, is not more than 1.2 m/s. Rotating poles shall have a free space of 1500 mm around the pole when installed as single components. When grouped in a dedicated area, a separation of 2000 mm between poles may be used. If the speed of the rotating pole devices can be increased by the patron using mechanical advantage, a greater free space shall be provided to take into account the higher speed. The surface in the free space around the pole shall have impact attenuating surfacing with a critical fall height rating of 1500 mm based on the user's hand position being the support point.	NA
4.8	MECHANICAL RIDES Mechanical rides shall be under the control and supervision of a competent person. All mechanical rides shall comply with AS 3533.1, AS 3533.2 and AS 3533.3.	NA
4.9	AIR PLAY DEVICES These devices obtain energy from positive and negative air pressure. Air play devices include: air canons, ball fountains, ball drops, ball vacuums, and air play tables. To prevent facial injuries, and specifically eye injuries, the installation shall be risk assessed and air canons shall be installed so that patrons can not be impacted by a ball at an injurious velocity. This is normally achieved by mounting the device above ground and aiming at a designated area. Air canon installation shall not inhibit patron movement or introduce obstacles within passageways. The motion of these devices shall be limited so that they can not be rotated into the passageway. Balls used in air play devices shall be manufactured from low density closed-cell foam with a density not exceeding 30 kg/m^3 . There shall be no crushing points or shearing points between moving and/or stationary parts of the equipment. A risk assessment shall be conducted on the as-installed air play area during commissioning to ensure the safety of patrons.	NA
4.10	CLIMBING WALLS Climbing and bouldering walls in excess of 2.5 m vertical height shall be	NA

Unless otherwise agreed in writing, this document is issued by the Company subject to its General Conditions of Service printed overleaf, available on request or accessible at https://www.sgs.com/en/Terms-and-Conditions. Attention is drawn to the limitation of liability, indemnification and jurisdiction issues defined therein. Any holder of this document is advised that information contained hereon reflects the Company's findings at the time of its intervention only and within the limits of Client's instructions, if any. The Company's sole responsibility is to its Client and this document does not exonerate parties to a transaction from exercising all their rights and obligations under the transaction documents. This document cannot be reproduced except in full, without prior written approval of the Company. Any unauthorized alteration, forgery or falsification of the content or appearance of this document is unlawful and offenders may be prosecuted to the fullest extent of the law. Unless otherwise stated the results shown in this test report refer only to the sample(s) tested and such sample(s) are retained for 30 days only.
Attention: To check the authenticity of testing /inspection report & certificate, please contact us at telephone: (86-755) 8307 1443, or email: CN.Doccheck@sgs.com
Building 30 and Building 18, Heimudan Science Park, Tianning District, Changzhou, Jiangsu, China 213017 t (86-519) 8558 7753 www.sgsgroup.com.cn
中国·江苏·常州市天宁区黑牡丹科技园30幢、18幢 邮编: 213017 t (86-519) 8558 7753 sgs.china@sgs.com
Member of the SGS Group (SGS SA)

Clause	Test Method & Test Requirement	Rating
	installed in accordance with AS 2316.1. Where the wall is used as access to other equipment it shall be installed in accordance with Figure 4.10. Impact attenuating surfacing shall be provided in accordance with Clause 3.2.7.	
Section 5	Operation	NC
Section 6	Inspection, maintenance and cleaning	
6.1	General A regular, systematic and informed inspection and maintenance routine is a central factor in providing a safe contained play facility. Where defects and the need for repair is identified during inspection and maintenance they should be addressed by prompt remedial action. In the absence of manufacturer's instructions a competent person shall determine the inspection requirements. Drawings and diagrams necessary for maintenance, inspection and checking of correction operation, and, when appropriate, repair of the equipment shall be provided. NOTE: Drawings and diagrams should be obtained from the manufacturer/supplier. The instructions shall also specify the following: (a) Where necessary, the servicing points and methods of servicing, e.g. lubrication, tightening of bolts, and re-tensioning of ropes. (b) That replacement parts shall comply with manufacturer's specifications. (c) Any special disposal treatment required for particular equipment or parts. (d) Identification of spare parts. (e) Any additional measures to be taken during the run-in period, e.g. tightening of fastenings, tensioning of ropes. (f) The need to keep drainage holes clear. (g) That surfacing shall be maintained; in particular, the levels of loose fill materials. (h) That GRP (glass-reinforced plastics) shall be replaced or repaired before the glass fibres become exposed through wear or damage. This particularly applies to slides.	NC
6.2	inspection and maintenance	
6.2.1	Variability Instructions for inspection and maintenance in accordance with this Clause (6.2) shall be provided. NOTE: Drawings and diagrams should be obtained from the manufacturer/supplier. A list of the factors (e.g. levels of use, levels of vandalism, location, environmental parameters, age of equipment, mechanical complexity of equipment and the like) which are likely to affect the inspection frequency shall be provided.	NC

Unless otherwise agreed in writing, this document is issued by the Company subject to its General Conditions of Service printed overleaf, available on request or accessible at https://www.sgs.com/en/Terms-and-Conditions. Attention is drawn to the limitation of liability, indemnification and jurisdiction issues defined therein. Any holder of this document is advised that information contained hereon reflects the Company's findings at the time of its intervention only and within the limits of Client's instructions, if any. The Company's sole responsibility is to its Client and this document does not exonerate parties to a transaction from exercising all their rights and obligations under the transaction documents. This document cannot be reproduced except in full, without prior written approval of the Company. Any unauthorized alteration, forgery or falsification of the content or appearance of this document is unlawful and offenders may be prosecuted to the fullest extent of the law. Unless otherwise stated the results shown in this test report refer only to the sample(s) tested and such sample(s) are retained for 30 days only.
Attention: To check the authenticity of testing /inspection report & certificate, please contact us at telephone: (86-755) 8307 1443, or email: CN.Doccheck@sgs.com
Building 30 and Building 18, Heimudan Science Park, Tianning District, Changzhou, Jiangsu, China 213017 t (86-519) 8558 7753 www.sgsgroup.com.cn
中国·江苏·常州市天宁区黑牡丹科技园30幢、18幢 邮编: 213017 t (86-519) 8558 7753 sgs.china@sgs.com
Member of the SGS Group (SGS SA)

Clause	Test Method & Test Requirement	Rating
6.2.2	Frequency The instructions shall specify the type and frequency with which the equipment or its components are to be inspected or maintained. For the purposes of this requirement the following terms apply: NOTE: Not all items of equipment will require all three levels of inspection. (a) Daily routine inspection—the daily routine inspection is required to identify obvious hazards that may result from vandalism, use or weather conditions (e.g. damaged parts, sharps, and loss of impact attenuating surfacing). (b) Monthly operational inspection—the monthly operational inspection is a more detailed inspection to check the operation and stability of the equipment, especially for any wear (e.g. components where wear could be expected such as bearings and moving joints). NOTE: Special care should be taken to inspect padding on and around high use areas and safety matting. (c) Annual comprehensive inspection—the annual comprehensive inspection is conducted to establish, at specified intervals, the overall safety of equipment, foundations and surfaces. This includes the structural integrity of the contained play structure. This inspection also assesses any change in the safety of the equipment resulting from repairs made, or added or replaced components. NOTE: The comprehensive inspection may require dismantling of certain parts. The annual comprehensive inspection of the equipment shall be carried out by a competent person, such as an engineer or maintenance specialist, in strict accordance with the manufacturer's instructions. NOTE: See AS 3533.1—2009, Appendix B for training and selection of competent persons. Inspection frequencies shall be specified for each item of equipment with consideration given to the following recommended frequencies: (i) Daily routine inspections should be conducted each day for equipment and surfacing within a contained play facility. (ii) Monthly operational inspections should be conducted every 1 to 3 months. (iii) Annual comprehensive inspections should be conducted at intervals of not greater than 12 months. NOTE: Appendix F contains inspection information and schedule guides.	NC
6.2.3	Maintenance information/instructions The instructions shall specify all matters which require attention as part of maintenance. The following are examples: (a) The servicing points and methods of servicing (e.g. lubrication, tightening of bolts and re-tensioning of ropes). (b) Replacement parts shall comply with manufacturer's specifications. (c) If special disposal treatment is required for some equipment or parts. (d) Identification of spare parts. (e) The need to maintain the integrity of the surface finishes of the equipment. Any additional measures to be taken during the run-in period, e.g. tightening	NC

Unless otherwise agreed in writing, this document is issued by the Company subject to its General Conditions of Service printed overleaf, available on request or accessible at https://www.sgs.com/en/Terms-and-Conditions. Attention is drawn to the limitation of liability, indemnification and jurisdiction issues defined therein. Any holder of this document is advised that information contained hereon reflects the Company's findings at the time of its intervention only and within the limits of Client's instructions, if any. The Company's sole responsibility is to its Client and this document does not exonerate parties to a transaction from exercising all their rights and obligations under the transaction documents. This document cannot be reproduced except in full, without prior written approval of the Company. Any unauthorized alteration, forgery or falsification of the content or appearance of this document is unlawful and offenders may be prosecuted to the fullest extent of the law. Unless otherwise stated the results shown in this test report refer only to the sample(s) tested and such sample(s) are retained for 30 days only.
Attention: To check the authenticity of testing /inspection report & certificate, please contact us at telephone: (86-755) 8307 1443, or email: CN.Doccheck@sgs.com
Building 30 and Building 18, Heimudan Science Park, Tianning District, Changzhou, Jiangsu, China 213017 t (86-519) 8558 7753 www.sgsgroup.com.cn
中国·江苏·常州市天宁区黑牡丹科技园30幢、18幢 邮编: 213017 t (86-519) 8558 7753 sgs.china@sgs.com
Member of the SGS Group (SGS SA)

Clause	Test Method & Test Requirement	Rating
	of fastenings, tensioning of ropes. (f) The need to keep drainage holes clear. (g) The importance of maintaining impact attenuating surfacing. (h) The GRP (glass-reinforced plastics) shall be replaced or repaired before the glass fibres become exposed through wear or damage. This particularly applies to slides. NOTE: Appendix F contains inspection information and schedule guides.	
6.3	SAFETY MANAGEMENT SYSTEM	
6.3.1	General A safety management system complying with Clauses 6.3.2 to 6.3.9 shall be established for each contained play facility.	NC
6.3.2	Assessment of safety measures The effectiveness of all the safety measures used (including those required or recommended in this Standard) in the contained play facility shall periodically and systematically be assessed and, if it is found necessary on the basis of the operator's experience, or because circumstances have changed, the safety measures shall be altered to maintain or improve safety.	NC
6.3.3	Competence Individuals performing tasks such as assessment, inspection, repair and maintenance as part of a safety management system shall be competent to do so. The level of competence required will vary with the task and training may be necessary. Specialist skills may need to be sought for particular tasks. Each person assigned a task shall be informed of the task, and their responsibility and authority.	NC
6.3.4	General safety measures There should be a sign indicating the emergency procedures and contact details for the facility. Other contacts should also be provided so that users can notify the management of defects they have noticed (e.g. repairs needed or hazards for removal).	NC
6.3.5	Procedures relating to equipment safety	
6.3.5.1	General Equipment safety for a safety management system consists of the following elements: (a) Equipment register. (b) Inspection procedures. (c) Corrective action procedures. (d) Maintenance procedures. (e) Incident procedures.	NC

Unless otherwise agreed in writing, this document is issued by the Company subject to its General Conditions of Service printed overleaf, available on request or accessible at https://www.sgs.com/en/Terms-and-Conditions. Attention is drawn to the limitation of liability, indemnification and jurisdiction issues defined therein. Any holder of this document is advised that information contained hereon reflects the Company's findings at the time of its intervention only and within the limits of Client's instructions, if any. The Company's sole responsibility is to its Client and this document does not exonerate parties to a transaction from exercising all their rights and obligations under the transaction documents. This document cannot be reproduced except in full, without prior written approval of the Company. Any unauthorized alteration, forgery or falsification of the content or appearance of this document is unlawful and offenders may be prosecuted to the fullest extent of the law. Unless otherwise stated the results shown in this test report refer only to the sample(s) tested and such sample(s) are retained for 30 days only.
Attention: To check the authenticity of testing /inspection report & certificate, please contact us at telephone: (86-755) 8307 1443, or email: CN.Doccheck@sgs.com
Building 30 and Building 18, Heimudan Science Park, Tianning District, Changzhou, Jiangsu, China 213017 t (86-519) 8558 7753 www.sgsgroup.com.cn
中国·江苏·常州市天宁区黑牡丹科技园30幢、18幢 邮编: 213017 t (86-519) 8558 7753 sgs.china@sgs.com
Member of the SGS Group (SGS SA)

Clause	Test Method & Test Requirement	Rating
	It is crucial that equipment and surfaces are regularly inspected to assist in their safe performance and corrective actions are carried out. Assessing, and if necessary upgrading, equipment to meet current Standards is covered in Clause 6.3.8	
6.3.5.2	Equipment register An up-to-date register of all equipment shall be maintained. The register should include the following: (a) Identification of the facility. (b) Location of equipment within facility. (c) Equipment and impact attenuating surfacing details. (d) Installation dates. (e) Installer details. (f) Manufacturer warranty details. (g) Certificate(s) of inspection and testing (if applicable). (h) Inspection and maintenance instructions. (i) Operating instructions (if applicable). (j) Operator's records.	NC
6.3.5.3	Inspection procedures A program of inspections for all items of equipment based on the manufacturer's instructions and local risk factors shall be developed and maintained. The program shall include the frequency of inspection, and the elements to be inspected. Where hazards are identified, corrective action shall be initiated. See Clause 6.3.5.4.	NC
6.3.5.4	Corrective action procedures Corrective action procedures shall be developed and maintained where hazards are identified (e.g. by inspection, in incident reports, or by other people notifying the operator). Corrective action includes measures to be taken to correct defects or to reinstate the safe operation of the facility. Any defect that puts safety at risk shall either be corrected without delay, or the item shall be secured against use or removed. Care should be taken that repairs are not carried out in a manner which creates an additional hazard.	NC
6.3.5.5	Maintenance procedures Maintenance programs shall be developed and maintained for all items of equipment based on the manufacturer's instructions and local risk factors. The program shall include the frequency of maintenance, and the elements to be maintained. See Clause 6.5.	NC
6.3.5.6	Incident procedures Procedures to be followed in the event of injuries, near misses and equipment damage shall be developed and maintained. Records shall be kept of all	NC

通标标准技术服务(常州)有限公司 检验检测专用章 Inspection & Testing Services SGS-CSTC Standards Technical Services (Changzhou) Co., Ltd.

Unless otherwise agreed in writing, this document is issued by the Company subject to its General Conditions of Service printed overleaf, available on request or accessible at https://www.sgs.com/en/Terms-and-Conditions. Attention is drawn to the limitation of liability, indemnification and jurisdiction issues defined therein. Any holder of this document is advised that information contained hereon reflects the Company's findings at the time of its intervention only and within the limits of Client's instructions, if any. The Company's sole responsibility is to its Client and this document does not exonerate parties to a transaction from exercising all their rights and obligations under the transaction documents. This document cannot be reproduced except in full, without prior written approval of the Company. Any unauthorized alteration, forgery or falsification of the content or appearance of this document is unlawful and offenders may be prosecuted to the fullest extent of the law. Unless otherwise stated the results shown in this test report refer only to the sample(s) tested and such sample(s) are retained for 30 days only.
Attention: To check the authenticity of testing /inspection report & certificate, please contact us at telephone: (86-755) 8307 1443, or email: CN.Doccheck@sgs.com
Building 30 and Building 18, Heimudan Science Park, Tianning District, Changzhou, Jiangsu, China 213017 t (86-519) 8558 7753 www.sgsgroup.com.cn
中国·江苏·常州市天宁区黑牡丹科技园30幢、18幢 邮编: 213017 t (86-519) 8558 7753 sgs.china@sgs.com
Member of the SGS Group (SGS SA)

Clause	Test Method & Test Requirement	Rating
	notifications of defects and perceived hazards. All information about incidents brought to the attention of the operator should be recorded on a form that includes at least the following details: (a) Date and time of incident. (b) Number of patrons in the facility (c) Location of incident. (d) Description of incident. (e) Equipment involved (if any). (f) Contributing factors (if known). (g) Corrective action recommended. (h) Date corrective action completed. If the incident involved personal injury, the following information should also be recorded: (i) The injured person's details, including name, address, age and gender. (ii) The injury sustained. (iii) The person(s) notified, and the time and date of notification. (iv) Treatment (if known). In order to assist manufacturers to improve the safety of their equipment, it is recommended that all incidents involving equipment be notified to the manufacturer (if known).	
6.3.6	Records Records shall be kept to demonstrate that the procedures outlined in Clauses 6.3.5.1 to 6.3.5.6 have been followed. The records should include details of action taken and confirmation of all remedial work carried out. For practical purposes, the information required by Clauses 6.3.5.1 to 6.3.5.6 may be amalgamated. A format for these records should be developed and maintained. These records should be permanently retained. Inspection procedure, correction procedure and maintenance procedure records should be filled in, signed and dated as soon as practicable after the procedures have been completed.	NC
6.3.7	Equipment alterations Alterations to parts of a structure that could affect the essential safety of the equipment should only be carried out after consultation with the manufacturer. If the manufacturer cannot be contacted within a reasonable time, a competent person (other than the manufacturer) should be consulted.	NC
6.3.8	Equipment not meeting current Standards If equipment does not comply with this Standard, it should be removed from use.	NC
6.3.9	Equipment removal If a piece of equipment is to be temporarily removed from the facility (e.g. for maintenance), any anchorages or foundations left in place shall be safeguarded and the site made safe. If a piece of equipment is to be permanently removed, any anchorages or foundations shall be removed or	NC

Unless otherwise agreed in writing, this document is issued by the Company subject to its General Conditions of Service printed overleaf, available on request or accessible at https://www.sgs.com/en/Terms-and-Conditions. Attention is drawn to the limitation of liability, indemnification and jurisdiction issues defined therein. Any holder of this document is advised that information contained hereon reflects the Company's findings at the time of its intervention only and within the limits of Client's instructions, if any. The Company's sole responsibility is to its Client and this document does not exonerate parties to a transaction from exercising all their rights and obligations under the transaction documents. This document cannot be reproduced except in full, without prior written approval of the Company. Any unauthorized alteration, forgery or falsification of the content or appearance of this document is unlawful and offenders may be prosecuted to the fullest extent of the law. Unless otherwise stated the results shown in this test report refer only to the sample(s) tested and such sample(s) are retained for 30 days only.
Attention: To check the authenticity of testing /inspection report & certificate, please contact us at telephone: (86-755) 8307 1443, or email: CN.Doccheck@sgs.com
Building 30 and Building 18, Heimudan Science Park, Tianning District, Changzhou, Jiangsu, China 213017 t (86-519) 8558 7753 www.sgsgroup.com.cn
中国·江苏·常州市天宁区黑牡丹科技园30幢、18幢 邮编: 213017 t (86-519) 8558 7753 sgs.china@sgs.com
Member of the SGS Group (SGS SA)

Clause	Test Method & Test Requirement	Rating
	otherwise made safe. It is recommended that hazardous equipment be disabled or destroyed to prevent its use elsewhere.	
6.4	INSPECTION A hazard identification inspection tour of the premises and the equipment should be undertaken every day. Items identified as a potential cause of injury and needing attention should be noted and follow-up rectification action planned, taken and noted. Records of these activities should be held on file for future reference. An inspection schedule should be drawn up in accordance with Clause 6.2.2. This is applicable to inspection of a new facility or an existing facility that has undergone a major refurbishment. Management should ensure that inspections are carried out in accordance with this schedule. Refer to Clause 6.2 for further details regarding inspection types and frequencies. NOTE: Appendix F contains inspection information and schedule guides. In newly constructed contained play facility, which are often characterized by exceptionally heavy use, the play equipment should be monitored regularly so that emerging faults and weaknesses are quickly identified and corrective action taken. Inspection forms should be analysed over a period of time so that inherent defects or weaknesses can be identified and remedial action taken. NOTE: Appendix F contains inspection information and schedule guides.	NC
6.5	MAINTENANCE Additional safety testing programs should be carried out for areas in or adjacent to the contained play facility, for example— (a) fixed electrical installation and portable electrical appliances; (b) gas equipment; (c) lifting equipment; (d) fire detection equipment; and (e) firefighting equipment. All electrical installations shall be maintained in accordance with AS/NZS 3000. The performance of residual current devices should be confirmed by periodic testing. All electrical appliances should be maintained and tested at appropriate periods. Materials that are used for impact protection can deteriorate in use over a period of time and these should be replaced accordingly at appropriate intervals. Particular attention should be paid to areas of high traffic or continual impact, such as the edges of pads, which are particularly prone to breakdown in these situations. Retention netting should be maintained at the appropriate tension for the purpose intended. The cutting equipment used to cut retention netting should be kept in a suitable location, e.g. the main office. Plastic slides can cause a build-up of static electricity, especially from nylon clothing and in certain atmospheric conditions. While it is unlikely that this will pose a health hazard, a spray that reduces the level of static electricity should	NC

Unless otherwise agreed in writing, this document is issued by the Company subject to its General Conditions of Service printed overleaf, available on request or accessible at https://www.sgs.com/en/Terms-and-Conditions. Attention is drawn to the limitation of liability, indemnification and jurisdiction issues defined therein. Any holder of this document is advised that information contained hereon reflects the Company's findings at the time of its intervention only and within the limits of Client's instructions, if any. The Company's sole responsibility is to its Client and this document does not exonerate parties to a transaction from exercising all their rights and obligations under the transaction documents. This document cannot be reproduced except in full, without prior written approval of the Company. Any unauthorized alteration, forgery or falsification of the content or appearance of this document is unlawful and offenders may be prosecuted to the fullest extent of the law. Unless otherwise stated the results shown in this test report refer only to the sample(s) tested and such sample(s) are retained for 30 days only.
Attention: To check the authenticity of testing /inspection report & certificate, please contact us at telephone: (86-755) 8307 1443, or email: CN.Doccheck@sgs.com
Building 30 and Building 18, Heimudan Science Park, Tianning District, Changzhou, Jiangsu, China 213017 t (86-519) 8558 7753 www.sgsgroup.com.cn
中国·江苏·常州市天宁区黑牡丹科技园30幢、18幢 邮编: 213017 t (86-519) 8558 7753 sgs.china@sgs.com
Member of the SGS Group (SGS SA)

Clause	Test Method & Test Requirement	Rating
	be applied. All damaged balls should be removed as they are found. Balls should be maintained to an even depth throughout the pool. Any plastic playballs in the playframe should be cleaned regularly.	
6.6	CLEANING PROCEDURES The contained play facility should be maintained in a clean state at all times. NOTES: 1 Sample cleaning check lists are provided in Appendix G. 2 Guidance for keeping balls in ball-pools clean is provided in Appendix I. The frequency of cleaning is dependent on many factors, including level of use, abuse, materials and design. There should be a procedure put in place so that immediate cleaning and disinfecting is carried out in the event of urination, defecation, vomiting or blood spillage. NOTE: Body fluid cleaning kits are available for this purpose. Competent persons should be employed to clean at high levels, e.g. the exterior of a play frame and top surfaces of tubular slides. If necessary, netting should be removed to permit access to some areas.	NC

通标标准技术服务（常州）有限公司 检验检测专用章 Inspection & Testing Services SGS-CSTC Standards Technical Services (Changzhou) Co., Ltd. Hardlines

Unless otherwise agreed in writing, this document is issued by the Company subject to its General Conditions of Service printed overleaf, available on request or accessible at https://www.sgs.com/en/Terms-and-Conditions. Attention is drawn to the limitation of liability, indemnification and jurisdiction issues defined therein. Any holder of this document is advised that information contained hereon reflects the Company's findings at the time of its intervention only and within the limits of Client's instructions, if any. The Company's sole responsibility is to its Client and this document does not exonerate parties to a transaction from exercising all their rights and obligations under the transaction documents. This document cannot be reproduced except in full, without prior written approval of the Company. Any unauthorized alteration, forgery or falsification of the content or appearance of this document is unlawful and offenders may be prosecuted to the fullest extent of the law. Unless otherwise stated the results shown in this test report refer only to the sample(s) tested and such sample(s) are retained for 30 days only.
Attention: To check the authenticity of testing /inspection report & certificate, please contact us at telephone: (86-755) 8307 1443, or email: CN.Doccheck@sgs.com
Building 30 and Building 18, Heimudan Science Park, Tianning District, Changzhou, Jiangsu, China 213017 t (86-519) 8558 7753 www.sgsgroup.com.cn
中国·江苏·常州市天宁区黑牡丹科技园30幢、18幢 邮编：213017 t (86-519) 8558 7753 sgs.china@sgs.com
Member of the SGS Group (SGS SA)

Sample Reference Photos

Test sample/ view side	Test sample/ view side
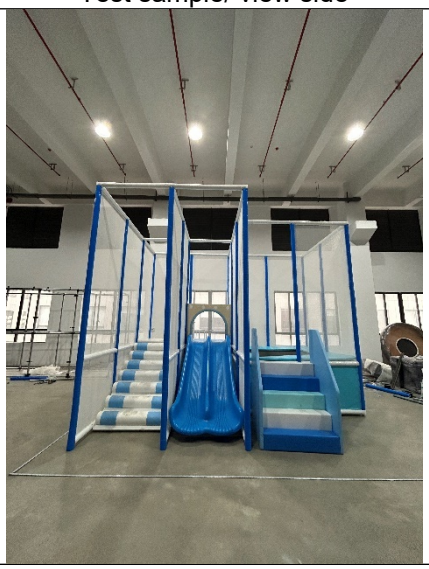	
Test sample/ view side	Test sample/ view side
	

Unless otherwise agreed in writing, this document is issued by the Company subject to its General Conditions of Service printed overleaf, available on request or accessible at https://www.sgs.com/en/Terms-and-Conditions. Attention is drawn to the limitation of liability, indemnification and jurisdiction issues defined therein. Any holder of this document is advised that information contained hereon reflects the Company's findings at the time of its intervention only and within the limits of Client's instructions, if any. The Company's sole responsibility is to its Client and this document does not exonerate parties to a transaction from exercising all their rights and obligations under the transaction documents. This document cannot be reproduced except in full, without prior written approval of the Company. Any unauthorized alteration, forgery or falsification of the content or appearance of this document is unlawful and offenders may be prosecuted to the fullest extent of the law. Unless otherwise stated the results shown in this test report refer only to the sample(s) tested and such sample(s) are retained for 30 days only.
Attention: To check the authenticity of testing /inspection report & certificate, please contact us at telephone: (86-755) 8307 1443, or email: CN.Doccheck@sgs.com
Building 30 and Building 18, Heimudan Science Park, Tianning District, Changzhou, Jiangsu, China 213017 t (86-519) 8558 7753 www.sgsgroup.com.cn
中国·江苏·常州市天宁区黑牡丹科技园30幢、18幢 邮编: 213017 t (86-519) 8558 7753 sgs.china@sgs.com
Member of the SGS Group (SGS SA)

Test sample/ view side	Test sample/ view side
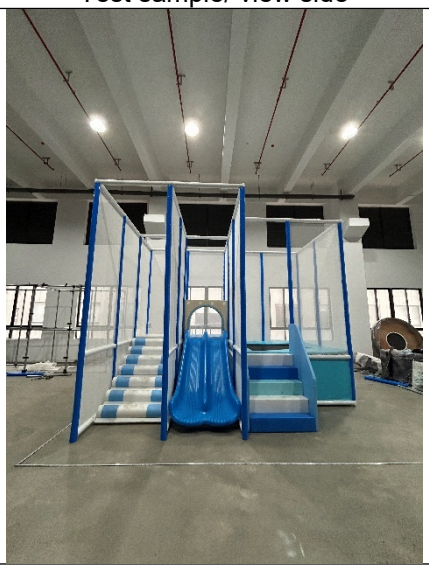	
Test sample/ view side	**Test sample/ view side**
	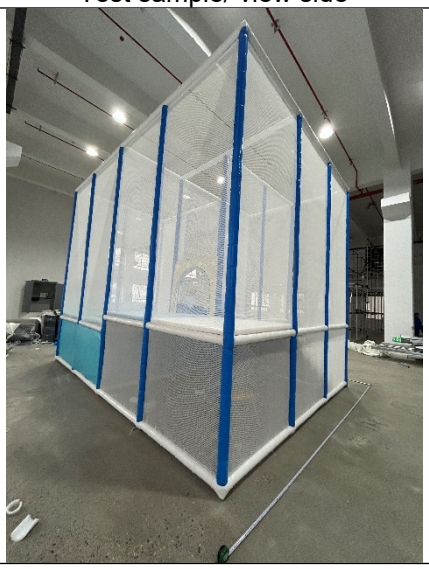

通标标准技术服务（常州）有限公司 检验检测专用章 Inspection & Testing Services SGS-CSTC Standards Technical Services (Changzhou) Co., Ltd. Hardlines

Unless otherwise agreed in writing, this document is issued by the Company subject to its General Conditions of Service printed overleaf, available on request or accessible at https://www.sgs.com/en/Terms-and-Conditions. Attention is drawn to the limitation of liability, indemnification and jurisdiction issues defined therein. Any holder of this document is advised that information contained hereon reflects the Company's findings at the time of its intervention only and within the limits of Client's instructions, if any. The Company's sole responsibility is to its Client and this document does not exonerate parties to a transaction from exercising all their rights and obligations under the transaction documents. This document cannot be reproduced except in full, without prior written approval of the Company. Any unauthorized alteration, forgery or falsification of the content or appearance of this document is unlawful and offenders may be prosecuted to the fullest extent of the law. Unless otherwise stated the results shown in this test report refer only to the sample(s) tested and such sample(s) are retained for 30 days only.
Attention: To check the authenticity of testing /inspection report & certificate, please contact us at telephone: (86-755) 8307 1443, or email: CN.Doccheck@sgs.com
Building 30 and Building 18, Heimudan Science Park, Tianning District, Changzhou, Jiangsu, China 213017 t (86-519) 8558 7753 www.sgsgroup.com.cn
中国·江苏·常州市天宁区黑牡丹科技园30幢、18幢 邮编：213017 t (86-519) 8558 7753 sgs.china@sgs.com
Member of the SGS Group (SGS SA)

Remark:

1. As requested by client, specific tests was not conducted according to AS 4685.1-2021, AS 4685.3-2021 and AS 3533.4.2-2013, details see report content.

Result/Rating/Record Key(s)

1. Result/Rating Keys: P = Pass = Meet; F = Fail = Not Meet; NA = Not applicable = Not suitable; NR = NC = Test not conduct/requested per client request; C = Claimed; R = Recorded; D = Data only

General Report Note(s)

1. Unless otherwise stated the results shown in this test report refer only to the sample(s) tested.
2. This document cannot be used for publicity, without prior written approval of the SGS.
3. Since the data and / or information above division line of front page is provided by the applicant, the relevant results or conclusions of this report are only made for these data and / or information, SGS is not responsible for the authenticity, integrity and results of the data and information and / or the validity of the conclusion. Testing results only apply to the sample as received.
4. Unless otherwise stated, the decision rule for conformity reporting is based on Binary Statement for Simple Acceptance Rule (*w*=0) stated in ILAC-G8:09/2019.
5. Test location:
    1. 1st、2nd Floors, Building 30, Heimudan Science Park, Tianning District, Changzhou, Jiangsu, China.
    2. Building 29, 30, 31, 32, Xuao Industrial Zone, Pengkuo Village, Youzhu Street, Qingtian County, Lishui City, Zhejiang Province, China.

*** End of Report ***

通标标准技术服务（常州）有限公司 检验检测专用章 Inspection & Testing Services SGS-CSTC Standards Technical Services (Changzhou) Co., Ltd. Hardlines

Unless otherwise agreed in writing, this document is issued by the Company subject to its General Conditions of Service printed overleaf, available on request or accessible at https://www.sgs.com/en/Terms-and-Conditions. Attention is drawn to the limitation of liability, indemnification and jurisdiction issues defined therein. Any holder of this document is advised that information contained hereon reflects the Company's findings at the time of its intervention only and within the limits of Client's instructions, if any. The Company's sole responsibility is to its Client and this document does not exonerate parties to a transaction from exercising all their rights and obligations under the transaction documents. This document cannot be reproduced except in full, without prior written approval of the Company. Any unauthorized alteration, forgery or falsification of the content or appearance of this document is unlawful and offenders may be prosecuted to the fullest extent of the law. Unless otherwise stated the results shown in this test report refer only to the sample(s) tested and such sample(s) are retained for 30 days only.
Attention: To check the authenticity of testing /inspection report & certificate, please contact us at telephone: (86-755) 8307 1443, or email: CN.Doccheck@sgs.com
Building 30 and Building 18, Heimudan Science Park, Tianning District, Changzhou, Jiangsu, China 213017 t (86-519) 8558 7753 www.sgsgroup.com.cn
中国·江苏·常州市天宁区黑牡丹科技园30幢、18幢 邮编：213017 t (86-519) 8558 7753 sgs.china@sgs.com
Member of the SGS Group (SGS SA)